Confidential B

PMIC Design Notice for MT8127 V0.1

(MT6323L)

Copyright © MediaTek Inc. All rights reserved.

Change List

Version	Date	Description
V0.1	2014.01.10	1st release

Copyright © MediaTek Inc. All rights reserved.

Content

- **MT6323L Introduction**
  - General description
  - Block diagram
  - Buck Converter/Regulator List
- Function Description
- Reference Design
- Function Block Notice

MT6323L – General Description

- The MT6323L built-in high performance stand along power management IC.
- Highly integrated functions fulfill all power requirement in smart phone system
  - Buck converter x 3 (VPROC, VSYS, VPA)
  - LDOs
    - Analog LDO *4
    - Digital LDO *19
    - RTC *1
  - Charger controller
    - AC/USB
    - Pulse-Charger
    - Support Apple Adapter
  - Driver
    - ISINK * 4 (24mA/48mA per channel)
  - Audio
    - Audio Codec
    - Class D/Class AB AMP * 1 (common power path)
  - RTC Macro
  - Gas Gauge

MT6323L – Block Diagram

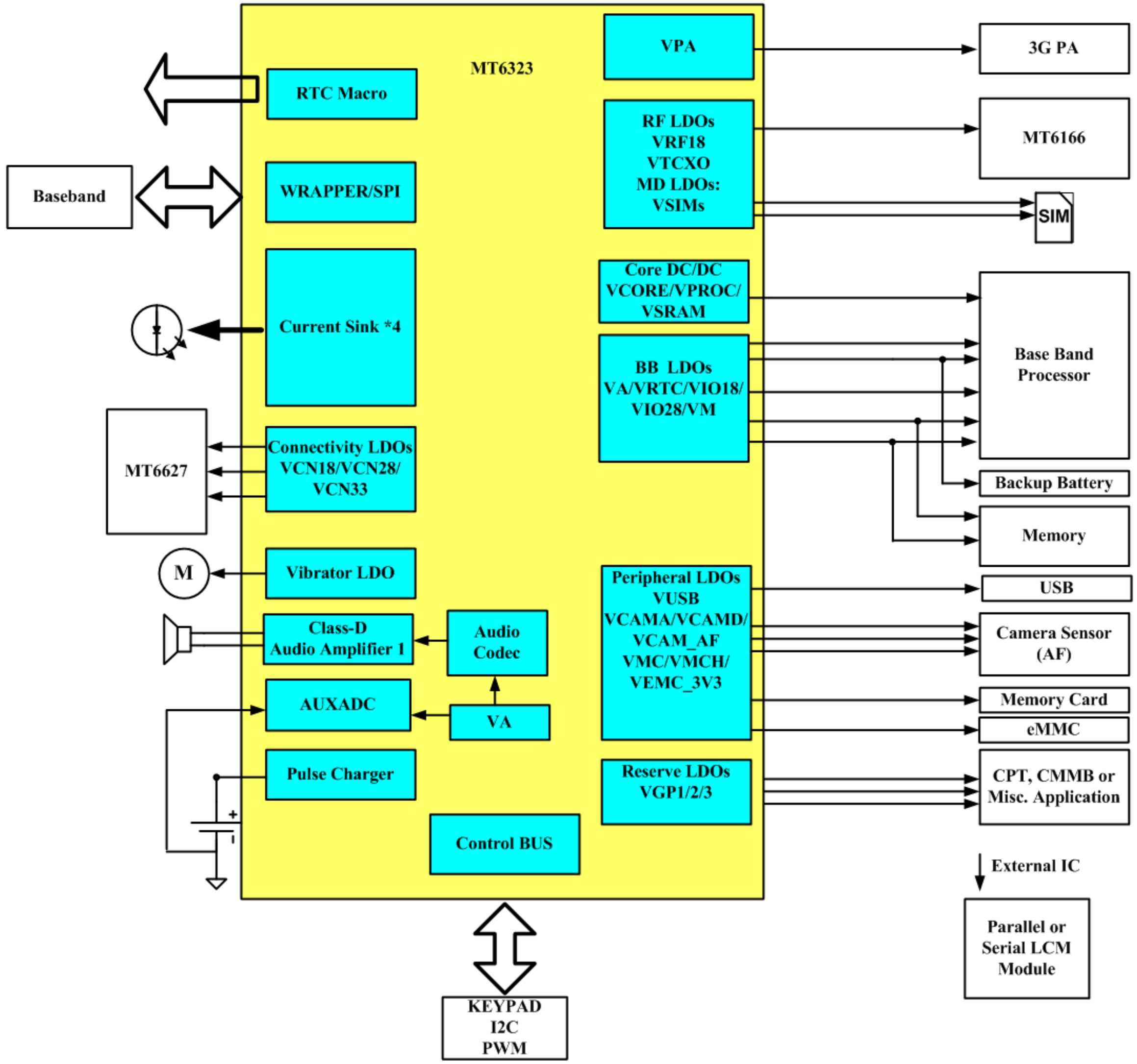

Feature Comparison List

Function	MT6329 PMIC	MT6320 PMIC	MT6323L PMIC
Buck Converter	5	8	3
LDO	21 (Include internal LDOs)	23	23
Driver	1. Keypad LED 2. Flash LED 3. ISINK LED 4. 35V Boost Controller	1) Keypad LED*1 2) Flash LED*1 3) ISINK LED*3	ISINK LED*4
Audio	Class-AB x2 Class-D x 2	Audio Codec Class-AB/D x1	Audio Codec Class-AB/D x1
Others	Analog Switch	RTC macro GPIO	RTC macro
Charger	1. Pulse Charger 2. Gas Gauge	1. Pulse Charger 2. Gas Gauge	1. Pulse Charger 2. Gas Gauge

Regulator Comparison List (1/4)

Block	Sub-block	MT6329 PMIC		MT6320 PMIC		MT6323L PMIC	
		Vout	I_max	Vout	I_max	Vout	I_max
High Current Regulator	VCORE	0.75~1.3 (DC/DC+DVFS)	1000	0.85~1.25 (DC/DC+DVFS)	1200	**0.7~1.4**	**2800**
	VPROC	0.75~1.3 (DC/DC+DVFS)	1500	0.85~1.25 (DC/DC+DVFS)	2000		
	VSRAM	0.75~1.3 LDO	360	0.85~1.25 (DC/DC+DVFS)	600		
	VSYS	N/A		N/A		2.2	**1400**
	VPA	0.9~3.4 (DC/DC)	800	0.5~3.4 (DC/DC)	600	0.5~3.4	600
	VIO18	1.8V (DC/DC)	900	1.8 (DC/DC)	600	LDO	
	VM	1.2 LDO	300	1.2/1.3/1.5 (DC/DC)	1100	LDO	
	VRF18_1	1.825 (DC/DC)	250	1.825 (DC/DC)	450	LDO	
	VRF18_2	N/A		1.825 (DC/DC)	450	N/A	

- **MT6323L merge VCORE/VPROC/VSRAM in one buck converter and current rating increase to 2800mA.**
- **Add VSYS buck converter for VSYS LDO input to improve overall efficiency.**

Regulator Comparison List (2/4)

Block	Sub-block	MT6329 PMIC		MT6320 PMIC		MT6323L PMIC	
		Vout	I_max	Vout	I_max	Vout	I_max
ALDO	VA	1.8/2.0/2.1/2.5	100	1.8	40	2.8	**150**
	VA28	2.5/2.8	100	2.8	40	N/A	
	VRF28_1	2.85	200	2.85	200	N/A	
	VRF28_2			1.8/2.85	200	N/A	
	VTCXO_1	2.8	40	2.8	40	N/A	
	VTCXO			1.8/2.8	40	2.8	40
	VCAMA	1.5/1.8/2.5/2.8	200	1.5/1.8/2.5/2.8	200	**2.8**	**150**
	VCN28	N/A		N/A		2.8	30

- **Change VA voltage from 1.8V to 2.8V for Audio/AUXADC dedicated power.**
- **Remove ABB dedicated power and merged to VIO18.**
- **Remove VRF28_1, VRF28_2**
- **Add VCN28 for MT6627 2.8V domain dedicated power**
- **Remove VCAMA 1.5/1.8/2.5 output voltage option.**

Regulator Comparison List(3/4)

Block	Sub-block	MT6329 PMIC		MT6320 PMIC		MT6323L PMIC	
		Vout	I_max	Vout	I_max	Vout	I_max
DLDO	VIO28	2.8	100	2.8	300	2.8	200
	VAST	0.9/1.0/1.1/1.2	300	0.9/1.0/1.1/1.2	300	N/A	
	VUSB	3.3	100	3.3	100	3.3	20
	VMC	1.3/1.5/1.8/2.5 2.8/3.0/3.3	200	1.8/3.3	200	1.8/3.3	100
	VMCH	1.3/1.5/1.8/2.5 2.8/3.0/3.3	400	3.0/3.3	800	3.0/3.3	400
	VEMC_3V3	N/A		3.0/3.3	800	3.0/3.3	400
	VEMC_1V8	N/A		1.2/1.3/1.5/1.8/2.5 2.8/3.0/3.3	200	N/A	
	VIBR	1.3/1.5/1.8/2.5 2.8/3.0/3.3	200	1.2/1.3/1.5/1.8/2.5 2.8/3.0/3.3	200	1.2/1.3/1.5/1.8/2.0 2.8/3.0/3.3	100
	VM	1.2	300	DC/DC		1.24/1.39/1.54/1.84	700/600/600/ 300
	VRF18	DC/DC		DC/DC		1.825	200
	VIO18	DC/DC		DC/DC		1.8	300

- **Change VIO28 current rating to 200mA**
- **Remove VAST LDO**
- **Merge VEMC_1V8 to VIO18**

Regulator Comparison List(4/4)

Block	Sub-block	MT6329 PMCI		MT6320 PMIC		MT6323L PMIC	
		Vout	I_max	Vout	I_max	Vout	I_max
DLDO	VCAMD	N/A		1.2/1.3/1.5/1.8/2.52.8/ 3.0/3.3	300	**1.2/1.3/1.5/1.8**	**150**
	VCAM_IO	N/A		1.2/1.3/1.5/1.8/2.52.8/ 3.0/3.3	200	**1.8**	**100**
	VCAM_AF	N/A		1.2/1.3/1.5/1.8/2.5/2.8 /3.0/3.3	200	**1.2/1.3/1.5/1.8/2.0 2.8/3.0/3.3**	**100**
	VGP1	1.2/1.3/1.5/1.8/2.5 2.8/3.0/3.3	300	1.2/1.3/1.5/1.8/2.5/2.8/ 3.0/3.3	300	**1.2/1.3/1.5/1.8/2.0 2.8/3.0/3.3**	**100**
	VGP2	1.3/1.5/1.8/2.5 2.8/3.0/3.3	100	1.2/1.3/1.5/1.8/2.5/2.8/ 3.0/3.3	200	**1.2/1.3/1.5/1.8/2.0 /2.5/2.8/3.0**	**100**
	VGP3	1.3/1.5/1.8/2.5 2.8/3.0/3.3	200	1.2/1.3/1.5/1.8/2.5/2.8/ 3.0/3.3	200	**1.2/1.3/1.5/1.8**	**200**
	VGP4	1.3/1.5/1.8/2.5 2.8/3.0/3.3	100	1.2/1.3/1.5/1.8/2.5/2.8 /3.0/3.3	200	N/A	
	VGP5	1.3/1.5/1.8/2.5 2.8/3.0/3.3	100	1.2/1.3/1.5/1.8/2.52.8/ 3.0/3.3	200	N/A	
	VGP6	N/A		1.2/1.3/1.5/1.8/2.52.8/ 3.0/3.3	200	N/A	
	VCN18	N/A		N/A		**1.8**	**120**
	VCN33	N/A		N/A		**3.3/3.4/3.5/3.6**	**240**
	VSIM1	1.3/3.0	100	1.2/1.3/1.5/1.8/2.52.8/ 3.0/3.3	200	**1.8/3.0**	**50**
	VSIM2	1.3/1.5/1.8/2.5 2.8/3.0/3.3	100	1.2/1.3/1.5/1.8/2.52.8/ 3.0/3.3	200	**1.8/3.0**	**50**

- **Add VCN18/VCN33 for MT6627 1.8V/3.3V domain dedicated power**

Content

- MT6323L Introduction
- **Function Description**
- Reference Design
- Function Block Notice

Function Description

Power on/off Sequence (by PWRKEY)

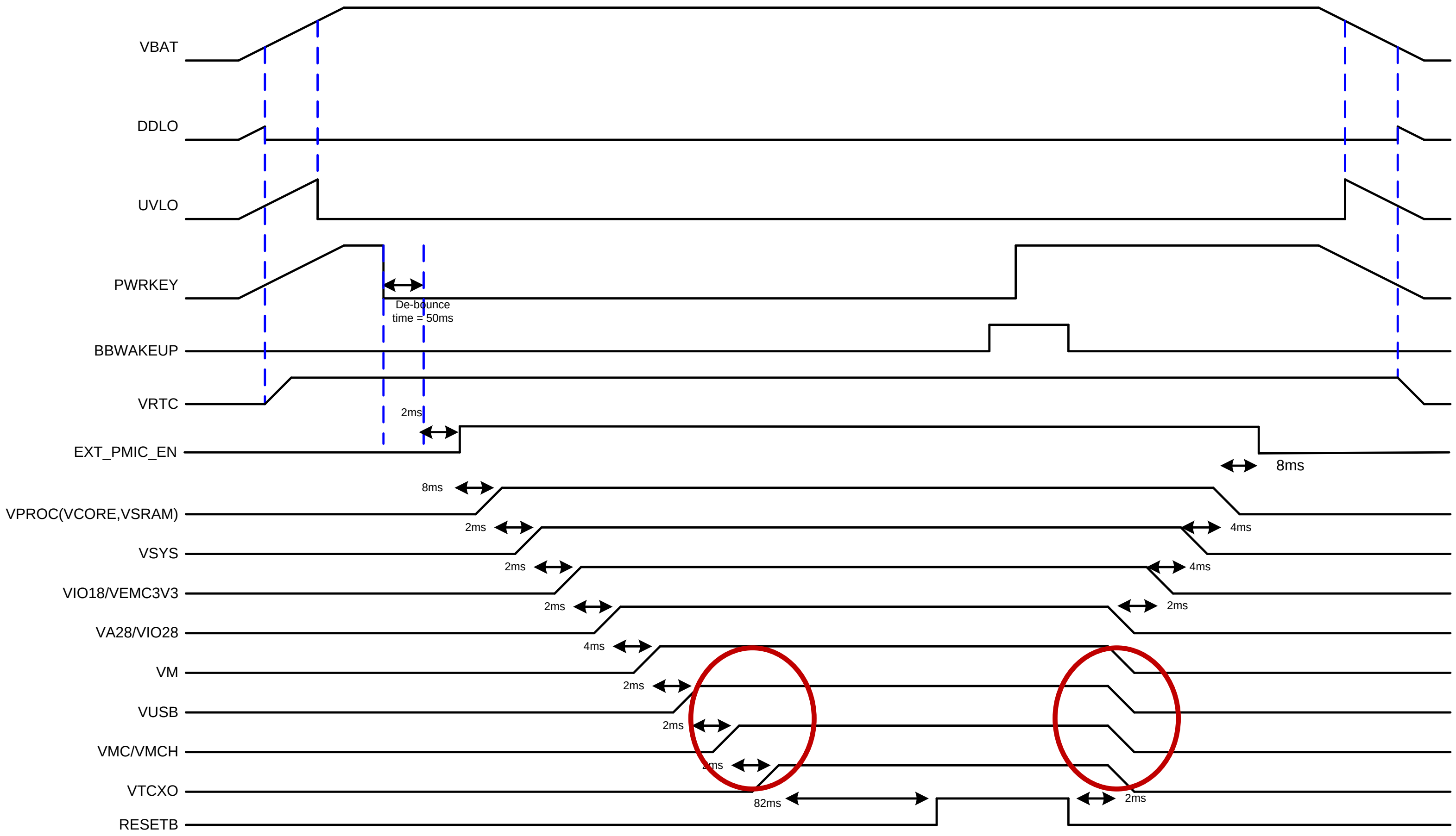

VTCXO on/off controlled by power on/off sequence control, and turn on after VMC/VMCH when 32K OSC existed application.

Function Description

Power on/off Sequence

Normal		
Power on sequence		Power off sequence
MT6323L		MT6323L
VRTC		PWRKEY
PWRKEY		**52msec**
50msec		VTCXO
12MHz Internal OSC/IVGEN		VMC/VMCH
2msec		VUSB_3V3
EXT_PMIC_EN		
8msec		
VPROC		VM
2msec		VA/VIO28
VSYS		
2msec		
VIO18/VEMC_3V3		
2msec		
VA/VIO28		
4msec		**2msec**
VM		VIO18/VEMC_3V3
2msec		**4msec**
VUSB_3V3		VSYS
2msec		**4msec**
VMC/VMCH		VPROC
2msec		**8msec**
VTCXO		EXT_PMIC_EN
82msec		**2msec**
RESETB Release		18MHz Internal OSC/IVGEN

Function Description

Thermal Protection

- 150℃ > Tj > 125/105℃ (register setting) , disable big power function, others keep the same
  ➔ Disable function of SPK, VIBR (HW)
- Function recover when Tj < 105/80℃ (register setting)
  ➔ Recover function of SPK, VIBR (HW)
- Tj > 150 ℃ PMU HW shutdown

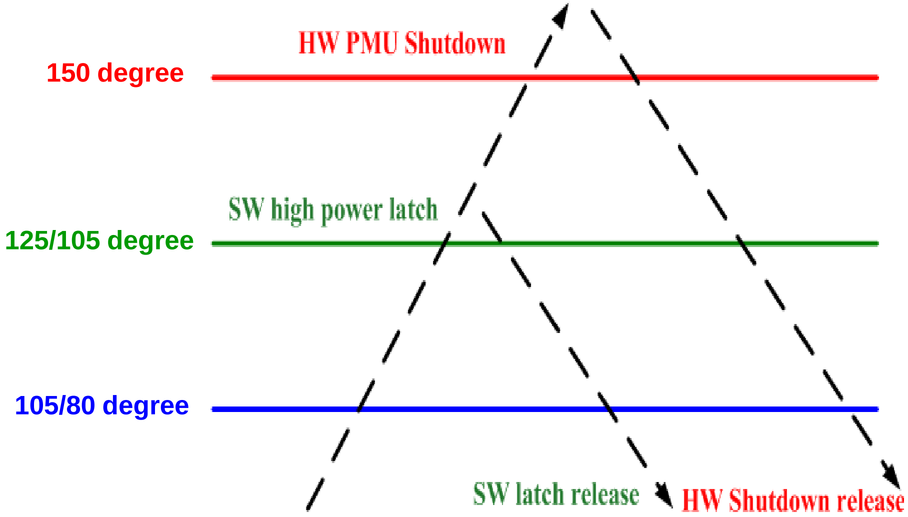

Function Description

SYSRST Reset Function

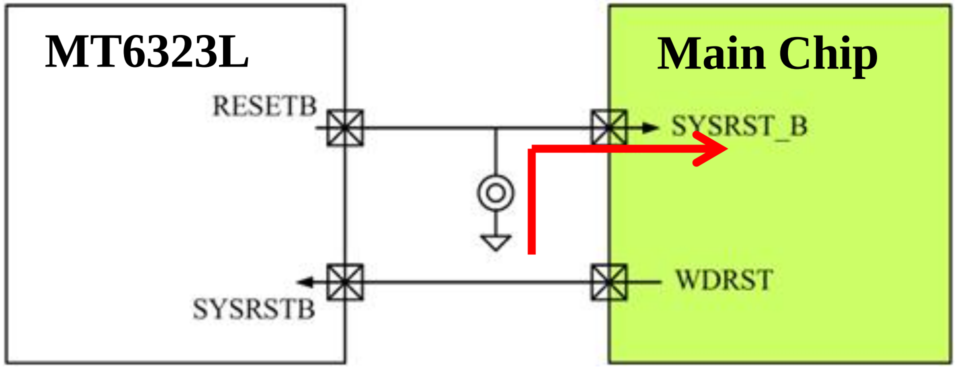

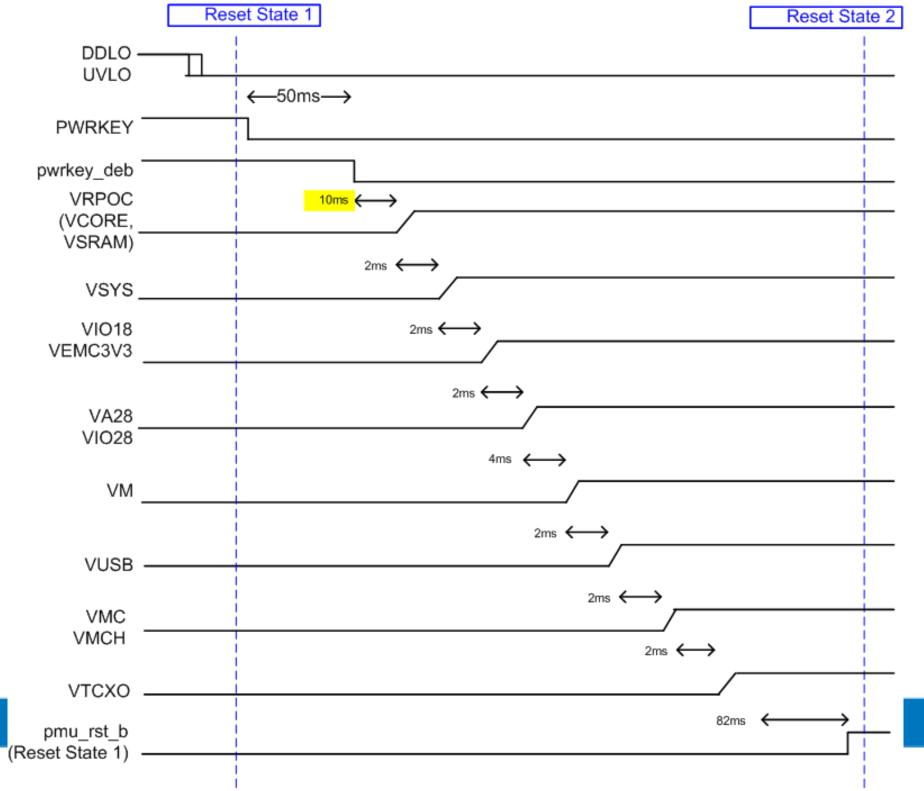

- **SW watchdog reset function**
  - Main chip WDRST should connect to MT6323L SYSRSTB
  - Watchdog (main chip) timeout reset (low active) when system hang
  - MT6323L will be reset when SYSRSTB pull down (as Reset State)
- **HW PMIC reset function**
  - Add external signal to main chip and MT6323L RESETB trace
  - Main chip will reset when SYSRST_B pull down and sent WDRST signal to MT6323L SYSRSTB reset PMIC

Function Description

HW External Shutdown Function

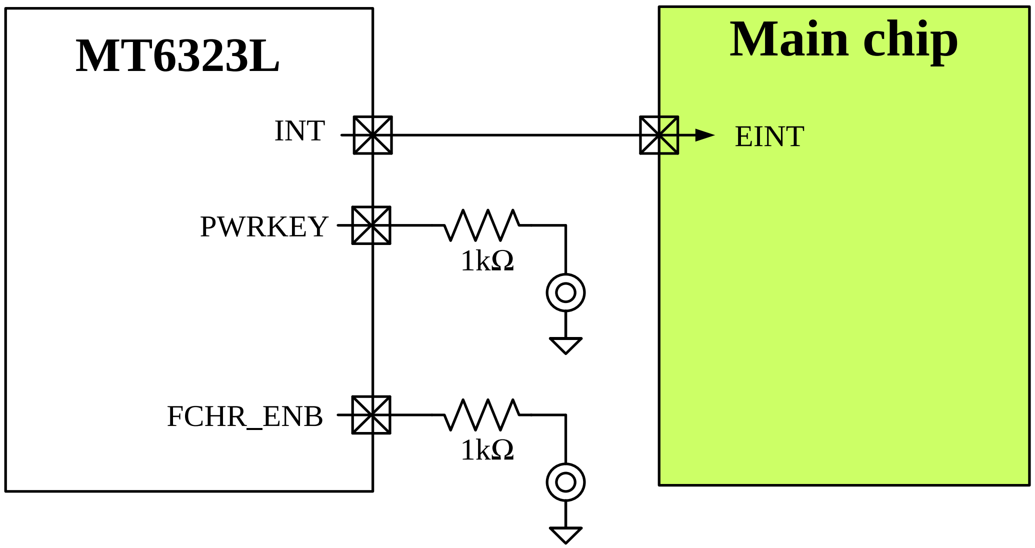

- **Short press PWRKEY or FCHR_ENB**
  - INT → EINT → SW Control
  - Power down, sleep mode or the other function
- **Long press to shutdown**
  - **5/8(default)/11/14 s with <1% accuracy**
  - Force shutdown PMIC
  - There are 3 option (setting by register)
    - PWRKEY + FCHR_ENB
    - PWERKEY only
    - FCHR_ENB only
  - SW disable long press counter
- **Re-start**
  - Phone will re-power on if keep long press PWRKEY after system shutdown

Function Description

PMIC Test Mode and FSOURCE

- **PMU_TESTMODE**
  - This pin should be connected to ground for normal operation.
- **FSOURCE**
  - This pin should be connected to ground for normal operation.

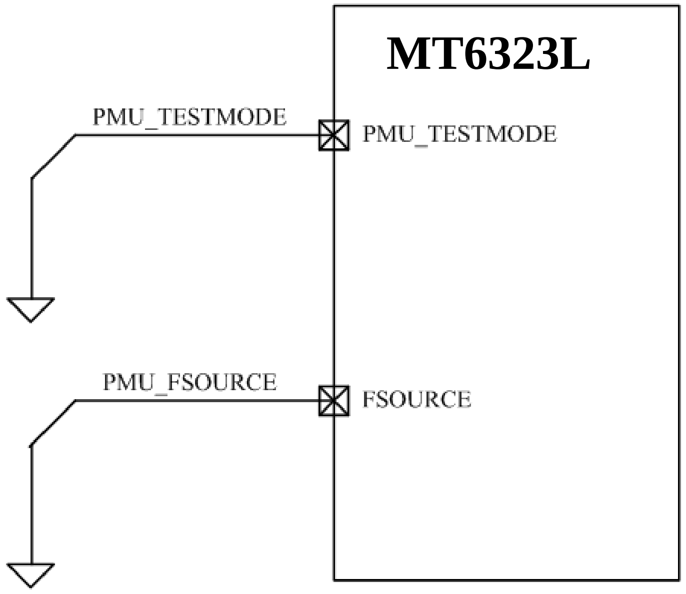

Content

- MT6323L Introduction
- Function Description
- **Reference Design**
- Function Block Notice

Reference Design

IC Protection: PWRKEY and BAT_ON

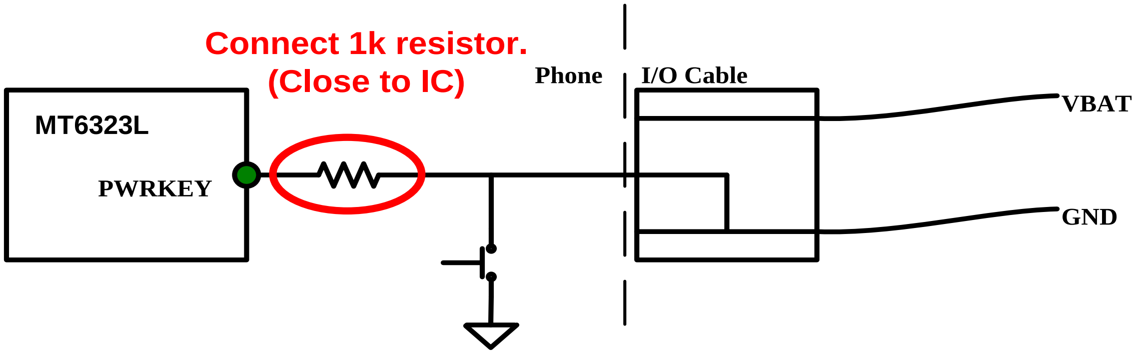

Please connect 1k resistor on phone PCB to protect **PWRKEY** no matter if PWRKEY connect to any I/O connector or not.

Please connect 1k resistor on phone PCB to protect **BAT_ON** pin if BAT_ON is used to detect battery.

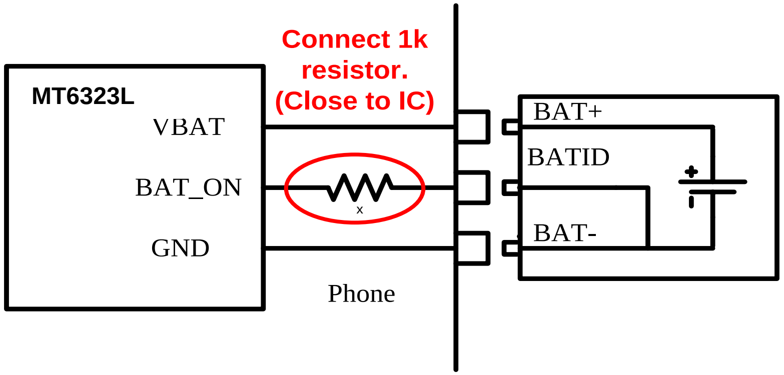

Reference Design

IC Protection: VBAT

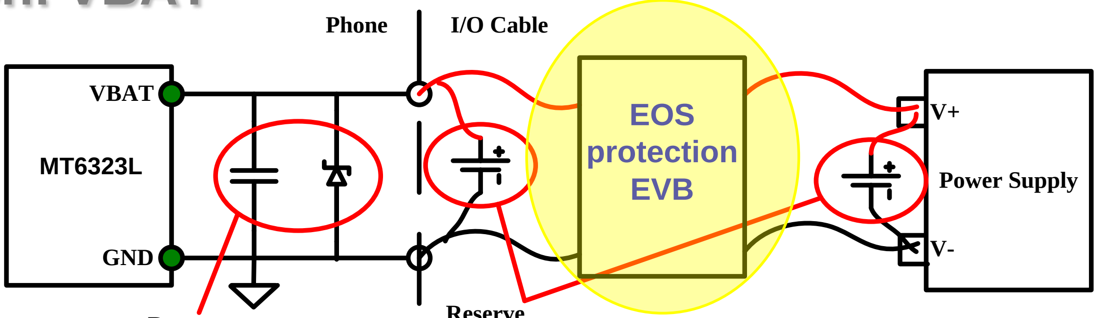

MT6323L has lower VBAT voltage rating. (Max. 4.5V.) Some protection should reserve to prevent the damage by voltage surge.

- Design notice in Phone side:

1) At least 22uF capacitor.

2) Add Zener diode (5.1V/500mW) to protect the IC against low frequency voltage surge. Put it between battery connector and MT6323L.

Notice: If using IO connector or test point to supply VBAT for download, manufacture, or repair, should let VBAT trace passing zener diode and 22uF capacitor before entering IC.

- Design notice in Power Supply side:

Add 1000uF (or above) capacitor at the output of the power supply to reduce the voltage bounce caused by long power cable. And the power cable should be as short as possible.

Also add 1000uF (or above) capacitor at the end of power cable (near phone side).

- Production line power supply:

Suggest add EOS protection EVB (please contact with MTK for further support)

Reference Design

Zener Diode Selection Guide (for VBAT)

Selection Guideline

- 500mW zener diode has lower Z_{ZT} than 200mW and can sink more exceptional surge voltage/current.
- MT6323L must selcet 5.1V/500mW zener to enhance VBAT pin protection.
- Ir<100uA @Vr=4.2V, Ta=25° C, Using 5.1V zener will introduce some leakage when VBAT = 4.2V. Large Ir current will introduce more leakage current.

Reference Design

Zener Diode Selection Guide (for VBAT) – 500mW Zener Diode

- Change Zener diode to 5.1V/500mW
  - 150mW zener has similar current sink capability, can only release part of the external pulse energy.
  - 500mW zener can share more than 90% of external energy.

Bypass surge energy with external capacitor and zener diode.

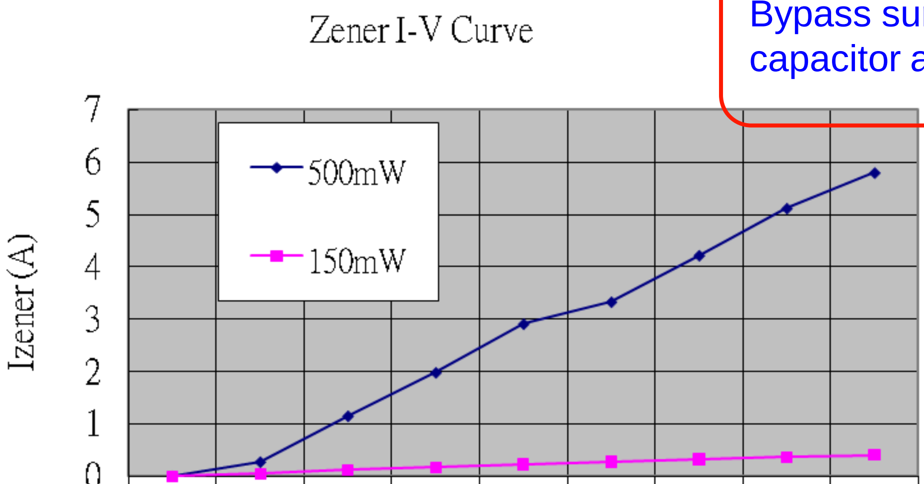

Vzener (V)	5.27	5.4	5.6	5.8	6	6.1	6.3	6.5	6.7
500mW	0	0.27	1.15	1.98	2.91	3.33	4.22	5.12	5.80
150mW	0.00	0.05	0.13	0.17	0.23	0.27	0.32	0.37	0.41

Vzener (V)

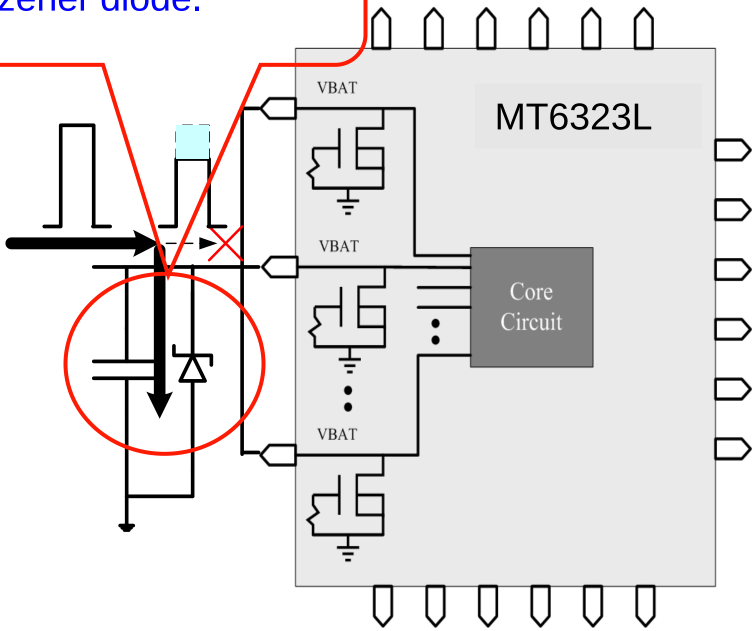

Reference Design

Zener Diode Selection Guide (for VBAT) – Validation List

- For design in,please notice the parts shipping delivery time.
- The latest validation list, please access the MTK BBS web.

Item	Vendor	Part number	Power (Watts)	Package	IR(uA) @VR=4.2V	Contact Window
1	On semi	MMSZ5231BT1G	500mW	SOD123	9	Tony Kao, 886-2-23761153 886-987-265-997 Email: tony.kao@onsemi.com
2	JIANGSU CHANGJIANG (长电科技)	MMSZ5231B	500mW	SOD123	72	Mr. Chan 0510-86858061 13601525970 E-mail: cyz@cj-elec.com
3	Prisemi	PZ3D4V2H	500mW	SOD323	11.5	欧新华 Mobile:18602108386 Tel: +86-21-60870158-8018 Email: ken.ou@prisemi.com
4	Prisemi	PZ5D4V2H	500mW	SOD523	4.85	
5	Vishay	MMSZ4689-V	500mW	SOD123	7	Mike_Wang 886-911313660 mike.wang@Vishay.com
6	Crownpo	CDZ55C5V1SM	500mW	0805	10.2	陳富榮Sam 138-12888205 Email: sam@sh-selmag.com

Reference Design

Zener Diode Selection Guide (for VBAT) – Co-layout

- For 2nd source parts concern, co-layout is flexible to select parts vender.
- SOD-123 and SOD-323 are most popular package of 500mW Zener and can co-layout . For thermal dissipation concern, SOD-123 and SOD-323 are fist choice and then SOD-523.
- For safety operation area, please notice the steady state power rerating and should exposed pad to a large copper.

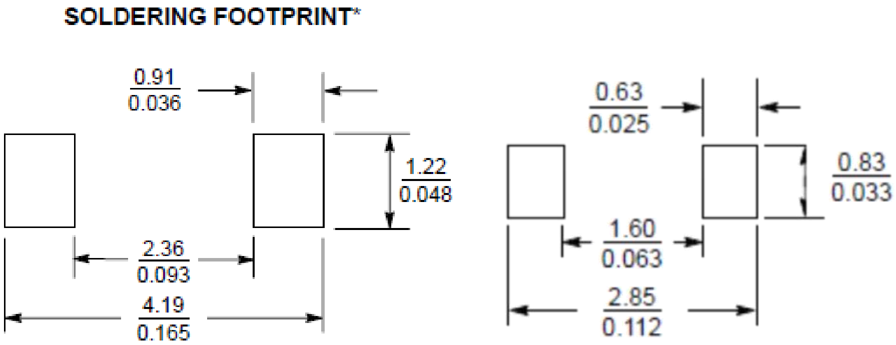

SOD-123 SCALE 10:1 (mm / inches)

SOD-323

SOD-123/ SOD-323

Reference Design

Input decoupling placement and GND layout guide

- Please keep CIN close to MT6323L and put in shield case.
- MT6323L DC/DC GND(GND_VPROC/GND_VPA/GND_VSYS) is connected together first, and then single trace connect to GND layer

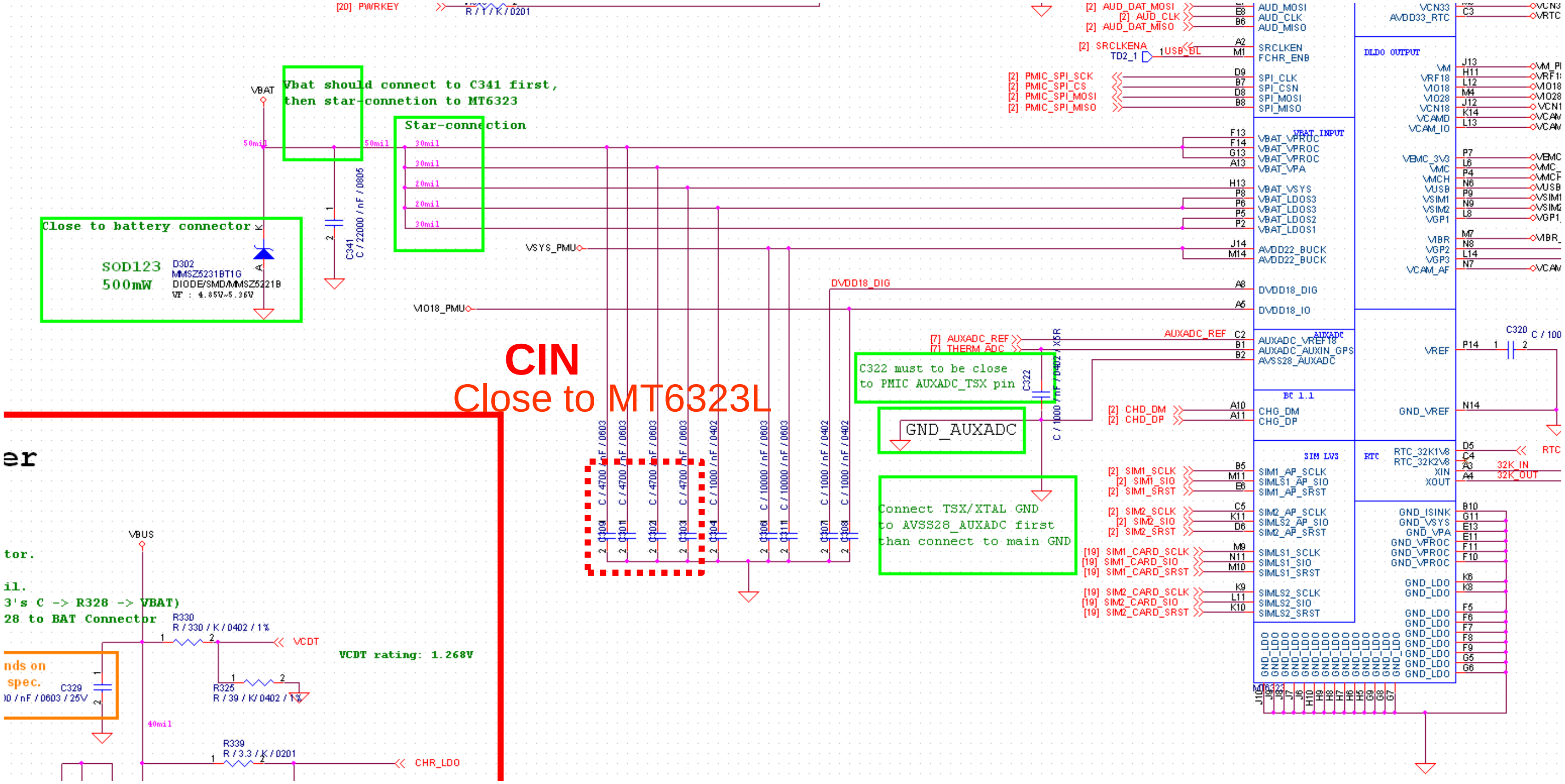

MEDIATEK

Reference Design

DC/DC Isolation GND: Layout Guide

- Use single trace ≥40mil or GND plan to connect buck input bypass cap and MT6323L GND pins of buck in the same layer, and then isolate this GND plan.

Buck GND Ball	Ball Name
J12	GND_VSYS
G13	GND_VPA
F12 F11 G11 E13	GND_VPROC

Reference Design

Output decoupling placement and schematic guide

- VPROC_FB and GND_VPROC_FB 4mil trace with good shielding from baseband (Differential)

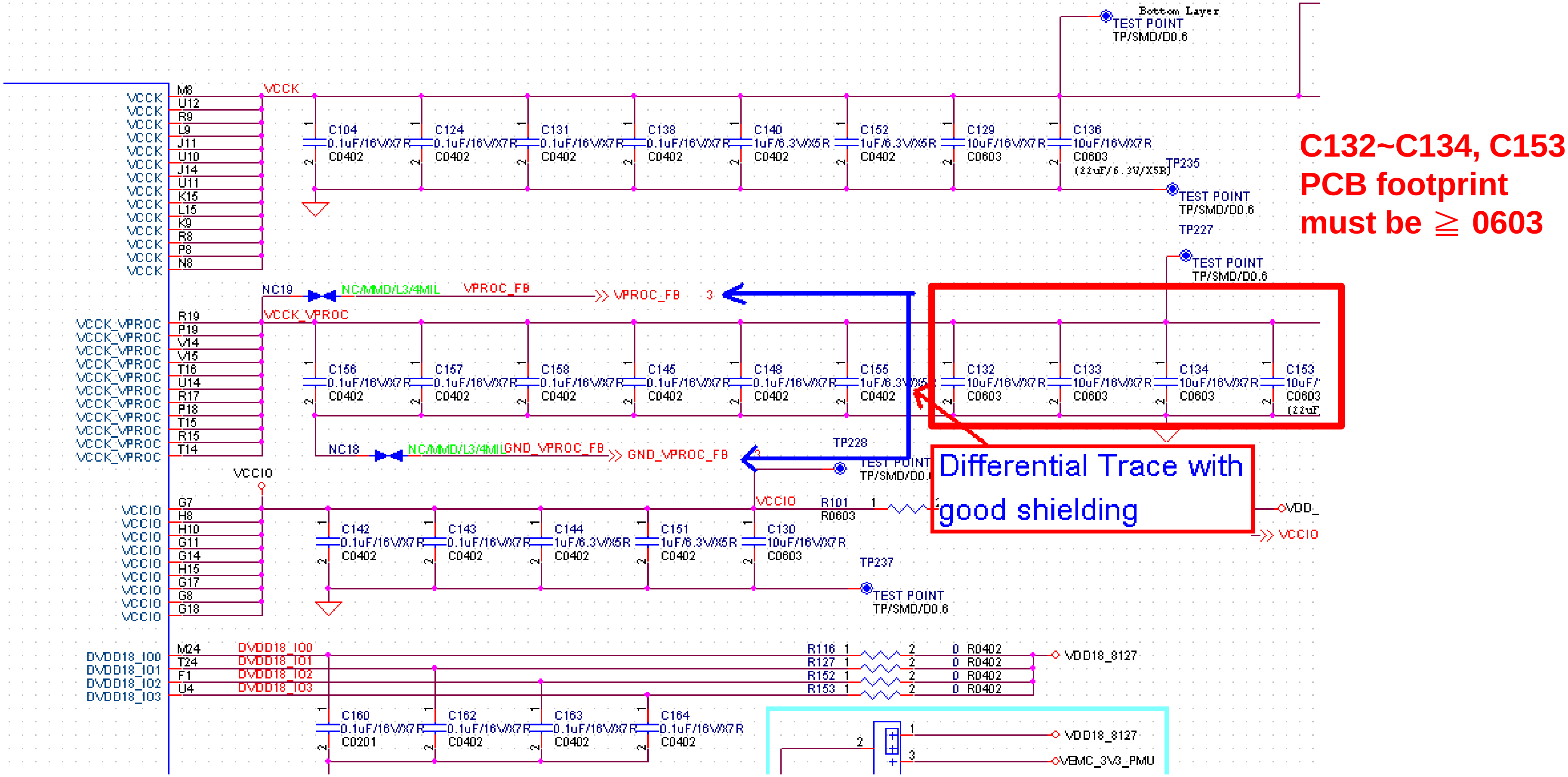

Reference Design

DC/DC List and Input/Output Decoupling

Regulator	Output Voltage(V)	Output Current(mA)	Input Decoupling	Output Decoupling	Notes
VPROC	0.7~1.4	2800	>10uF	L=0.68uH,C=10uF*4	Total output cap >40uF
VSYS	2.2	1200	>10uF	L=0.68uH, C=10uF*2	Total output cap >20uF
VPA	0.5~3.4	600	>4.7uF	L=2.2uH, C=2.2uF+2.2uF	Output cap range 4.4uF +/-20%

Reference Design

VPROC Remote Sense Application Notice: Layout Guide

- VPROC remote sense feedback & feedback_GND traces should be shielded by GND trace and be layout as differential pair to avoid noise coupled.

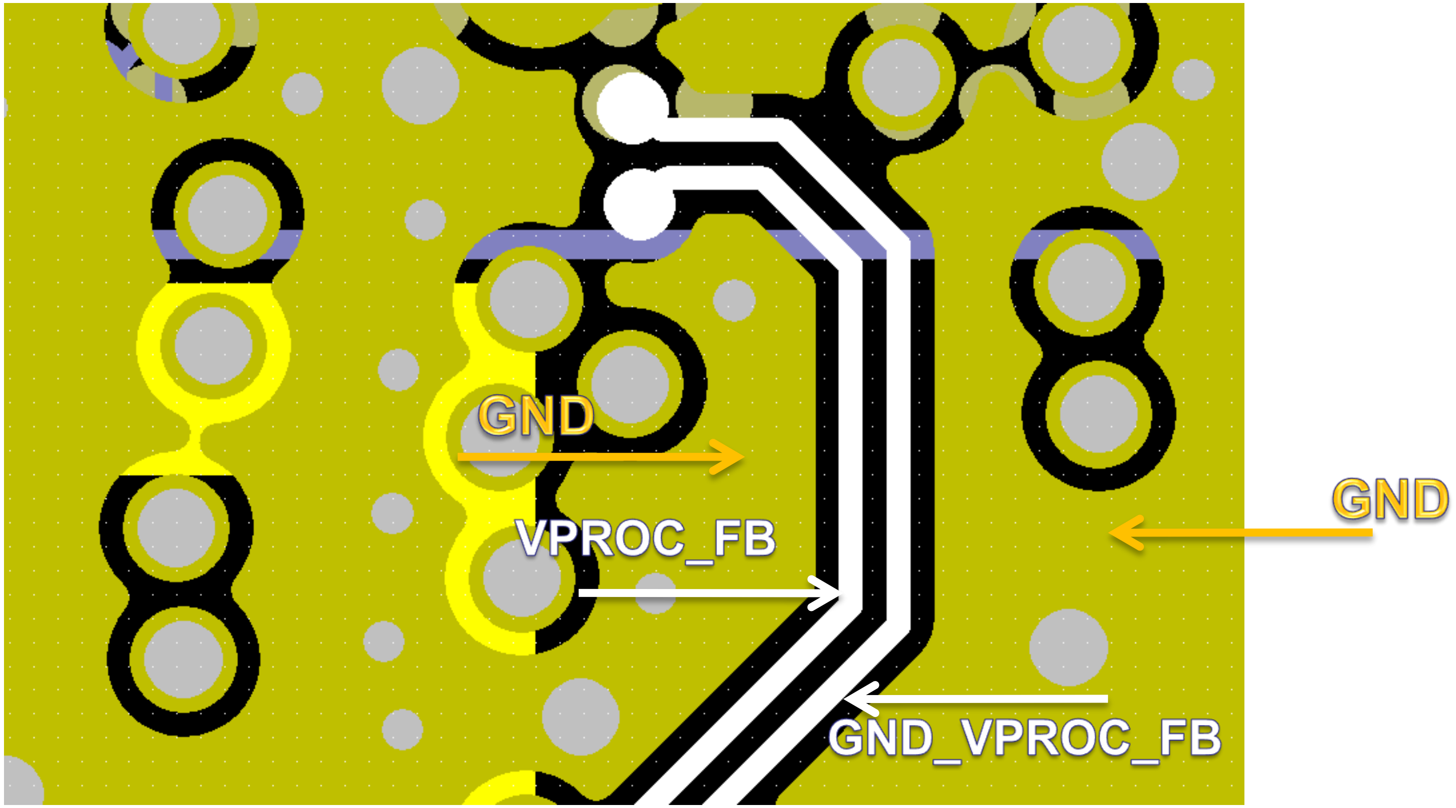

Reference Design

DC/DC Input Layout Trace Width

- Place input cap. as close MT6323L as possible and priority as VPROC>VSYS

Output net name	Trace Width (mils)
VBAT_VPROC	≥30
VBAT_VSYS	≥20

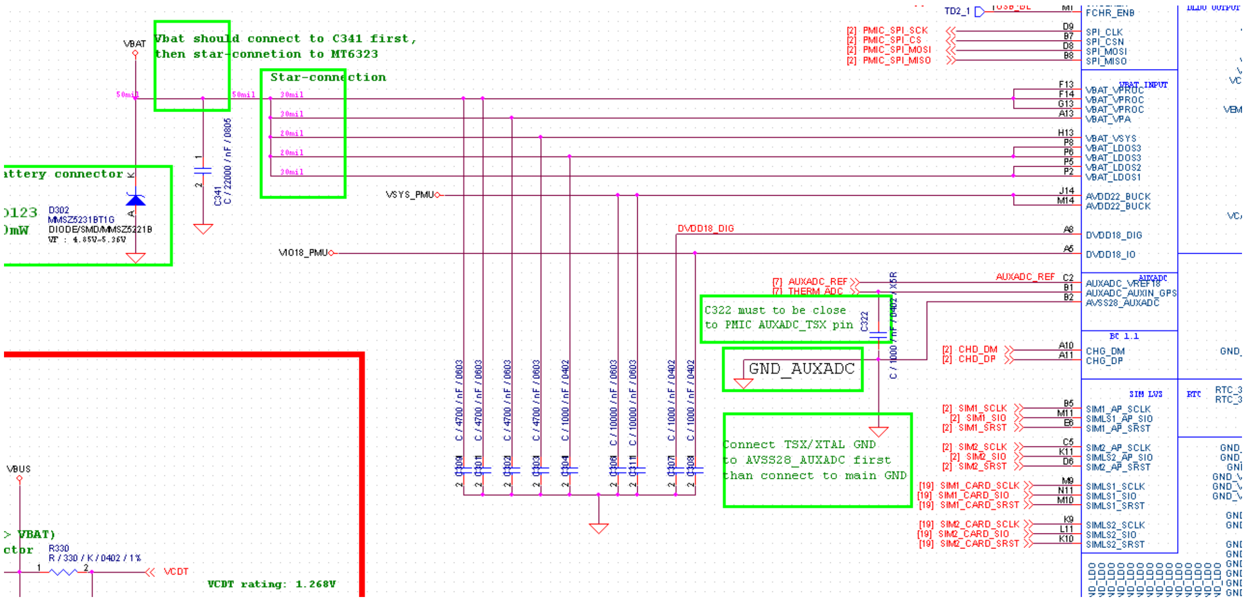

Reference Design

Buck Inductor Selection Guideline(1/3)

- 0.68uH (L301, L303) inductors are recommended to follow below notice.
  1. Rate current of the inductor should be larger than 3.2A(L301) (**Inductance change within +/-30% from nominal value).**
  2. Rate current of the inductor should be larger than 2.5A(L303) (**Inductance change within +/-30% from nominal value).**
  3. Although small size and high efficiency are major concerns, the inductor should have low core losses and low DCR (copper wire resistance). Smaller than 65 mohm is recommend.

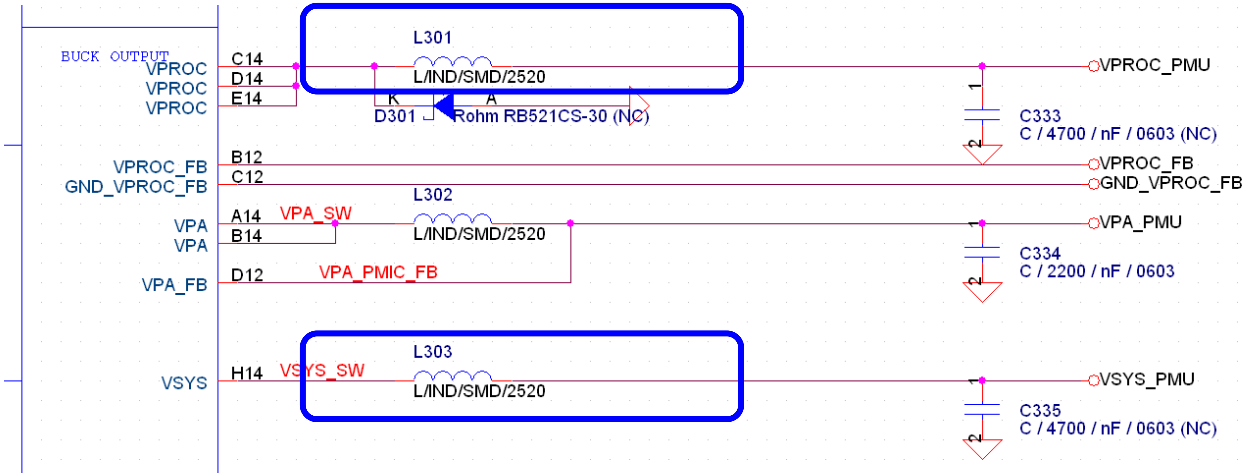

Reference Design

Buck Inductor Selection Guideline(3/3)

- L tolerance < +/- 30%
- Current rating > Imax (follow previously spec.)

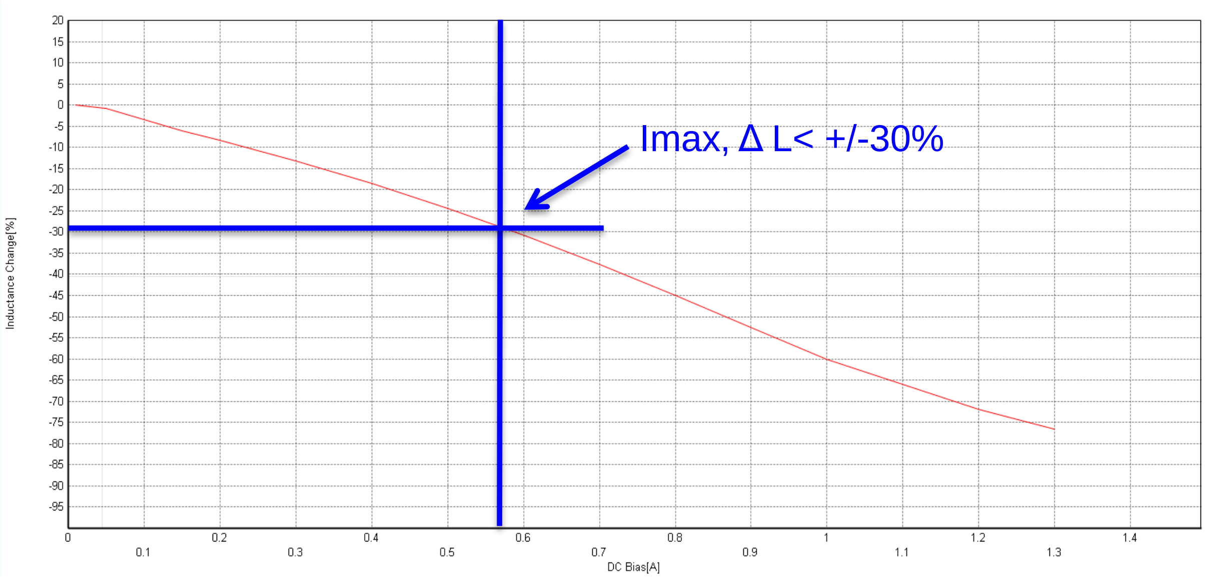

Note: 1. The inductor current rating "must be" higher than PMIC Imax and inductance variation should be smaller than +/-30% for **all operation condition**.

Reference Design

Buck Inductor Recommended Parts: 0.68uH

PN	Dimension(mm)	Thickness (mm)	DCR,max (mohm)	IDC1,max(A)	Manufacture
MDKK2020TR68MM	2.0*2.0	1.0	60	3.2	TAIYO
VLS252010HBT-R68M-LR	2.5*2.0	1.0	48	3.3	TDK
PMFE25201T-R68MS	2.5*2.0	1.0	48	3.4	CYNTEC
SPH252010HR68MTY02	2.5*2.0	1.0	65	3.2	SUNLORD

- Idc 1 : Inductor saturation current base on -30% inductance reduction from nominal value.
- Final spec. please refer to official release datasheet.
- For buck efficiency, DCR is recommended as low as well.

Copyright © MediaTek Inc. All rights reserved.

Reference Design
Buck Un-used configuration

- Configuration for VPA not in use:

  VBAT_PA connect to VBAT; GND_PA connect to GND

  VPA & VPA_FB: floating

  RG_VPA_EN = 0 & RG_VPA_NDIS_EN = 1

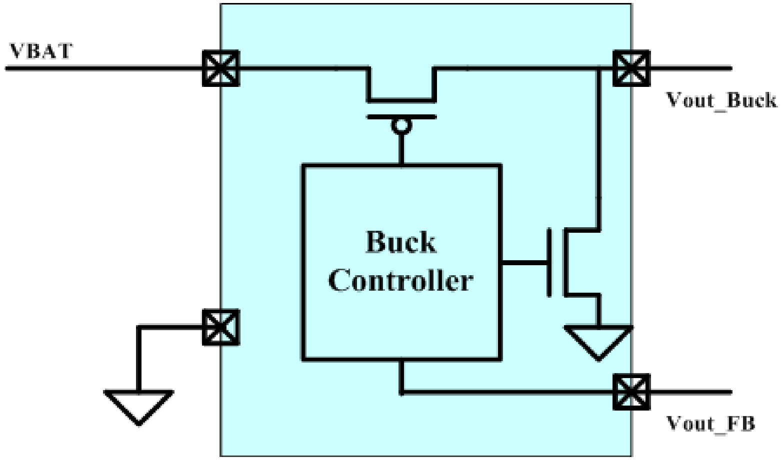

LDO List

LDO	Output Voltage(V)	Output Current(mA)	Bypass cap	cap range	Notes
VM	**1.24**/1.39/1.54/1.84	700	10uF	-20%~+20%	Far-end bypass cap
VRF18	1.825	200	1uF	**-20%~+200%**	Far-end bypass cap
VIO18	1.8	300	4.7uF	**-20%~+200%**	Far-end bypass cap
VCN_1V8	1.8	120	1uF	-20%~+20%	Far-end bypass cap
VCAMD	**1.2**/1.3/1.5/1.8	150	1uF	-20%~+20%	Far-end bypass cap
VCAM_IO	1.8	100	1uF	-20%~+20%	Far-end bypass cap
VGP3	**1.2**/1.3/1.5/1.8	200	1uF	-20%~+20%	Far-end bypass cap
VA	2.8	150	1uF	-20%~+20%	Far-end bypass cap
VTCXO	2.8	40	1uF	-20%~+20%	Far-end bypass cap
VCN28	2.8	30	1uF	-20%~+20%	Far-end bypass cap
VCAMA	2.8	150	3.2uF	-20%~+20%	**1uF near-end** 2.2uF Far-end bypass cap
VCN33	3.3/3.4/3.5/3.6	240	4.7uF	-20%~+20%	Far-end bypass cap
VIO28	2.8	200	2.2uF	**-20%~+200%**	Far-end bypass cap
VUSB	3.3	20	1uF	-20%~+20%	Far-end bypass cap
VMC	1.8/**3.3**	100	1uF	-20%~+20%	Far-end bypass cap
VMCH	3.0/**3.3**	400	2.2uF	-20%~+20%	Far-end bypass cap
VEMC_3V3	3.0/**3.3**	400	4.7uF	-20%~+20%	Far-end bypass cap
VCAM_AF	1.2/1.3/1.5/1.8/**2.0** 2.8/3.0/3.3	100	1uF	-20%~+20%	Far-end bypass cap
VSIM1	**1.8**/3.0	50	1uF	-20%~+20%	Far-end bypass cap
VSIM2	**1.8**/3.0	50	1uF	-20%~+20%	Far-end bypass cap
VGP1	1.2/1.3/1.5/1.8/2.0 **2.8**/3.0/3.3	100	1uF	-20%~+20%	Far-end bypass cap
VGP2	1.2/1.3/1.5/1.8/2.0 /**2.5**/2.8/3.0	100	1uF	-20%~+20%	Far-end bypass cap
VIBR	**1.2**/1.3/1.5/1.8/2.0 2.8/3.0/3.3	100	1uF	-20%~+20%	Far-end bypass cap
VDIG18	1.8	20	1uF	-20%~+20%	Far-end bypass cap
VRTC	2.8	2	0.1uF to 1000uF	-20%~+20%	Far-end bypass cap

LDO Layout rule

- Special LDO, please follow the table below.
- The others LDO trace wide> 4 mil.
- VREF 0.1uF bypass cap as close as possible to MT6323L
- If LDO don't use, you must disable this LDO after RESETB signal goes high.

VRF18: As wide as possible (≧15mil)， (trace length/wide<150)
VM: As wide as possible (≧35mil)， (trace length/wide<35)
VMCH: As wide as possible (≧12mil)
VEMC_3V3: As wide as possible (≧15mil)， (trace length/wide<100)
VCN33: As wide as possible (≧20mil, and place more than 2 via when layer transition)
VIO18: As wide as possible (≧12mil) / (8mil under chip area)
VGP3: As wide as possible (≧15mil)， (trace length/wide<315)
VCAMD: As wide as possible (≧15mil)， (Main CAM : trace length/wide<330)
VCAMA: As wide as possible (≧12mil)， (Main CAM : trace length/wide<310)

Reference Design

VRTC Layout Notice

- VRTC: Application circuit (2 options)
  - **<Option #1> 0.1uF**
  - **<Option #2> 0.1uF + 1.5kΩ + super cap**

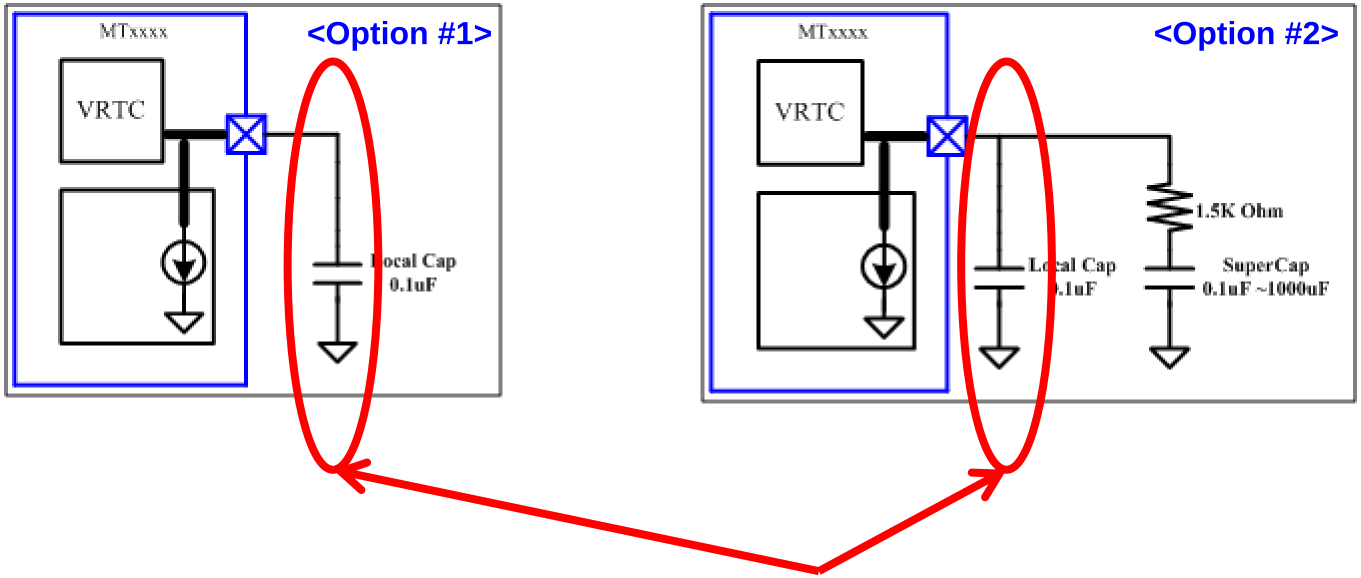

0.1uF cap MUST and be close to MT6323L

Copyright © MediaTek Inc. All rights reserved. / Together, We make the difference.

Reference Design

VREF Notice

- VREF bypass cap as close as possible to MT6323L
- GND_VREF pin must first connect to capacitor GND pin and then connect to system GND by VIA
- VREF cap is 0.1uF ~1uF.

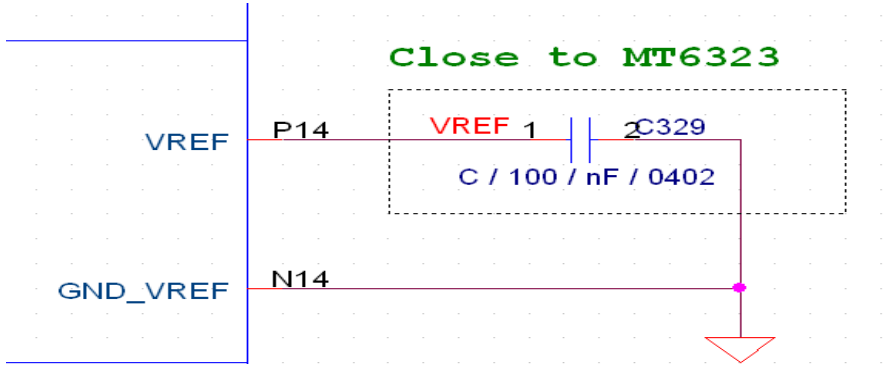

Copyright © MediaTek Inc. All rights reserved.
Together, We make the difference.

Content

- MT6323L Introduction
- Function Description
- Reference Design
- **Function Block Notice**
  - Driver
  - Download without Battery
  - BAT_ON Application Notice
  - External Buck for MT6588/92 Solution

Confidential B

Driver

Copyright © MediaTek Inc. All rights reserved.

Function Description – Current sink for backlight

- Current sink for LCM backlight LED:
  - Max. 8 current sink
  - No external component required
  - Current balance between channels
  - Individual channel current/enable control
- Note : Luminance become lower when low battery.
  - Please follow “Criteria: Vth = Vf + 0.1V (24mA)” to avoid this issue
  - Please follow “Criteria: Vth = Vf + 0.25V (48mA)” to avoid this issue
  - Ex.
    - Set VBAT low voltage shutdown at 3.5V
    - Select LED (Vf < 3.5 – 0.1 = 3.4V) will keep luminance equal under normal operation range.
  - VBAT (to LED+) trace from BATT connector as close as possible.

Reference design - Schematic
2~ 4 LED for Backlight

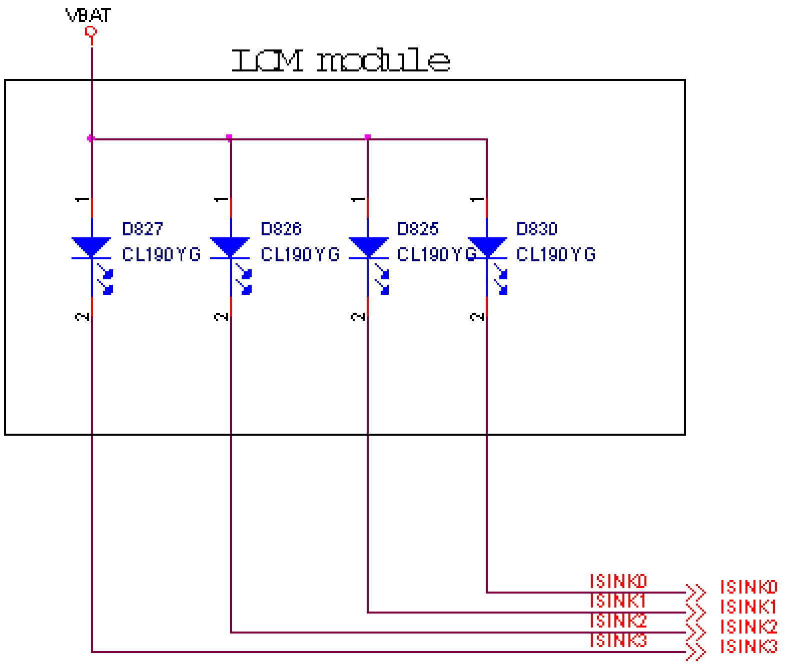

- Customer software configuration
  - ISINK~ 24mA (4mA/step)

Reference design - Schematic
5 LED for Backlight

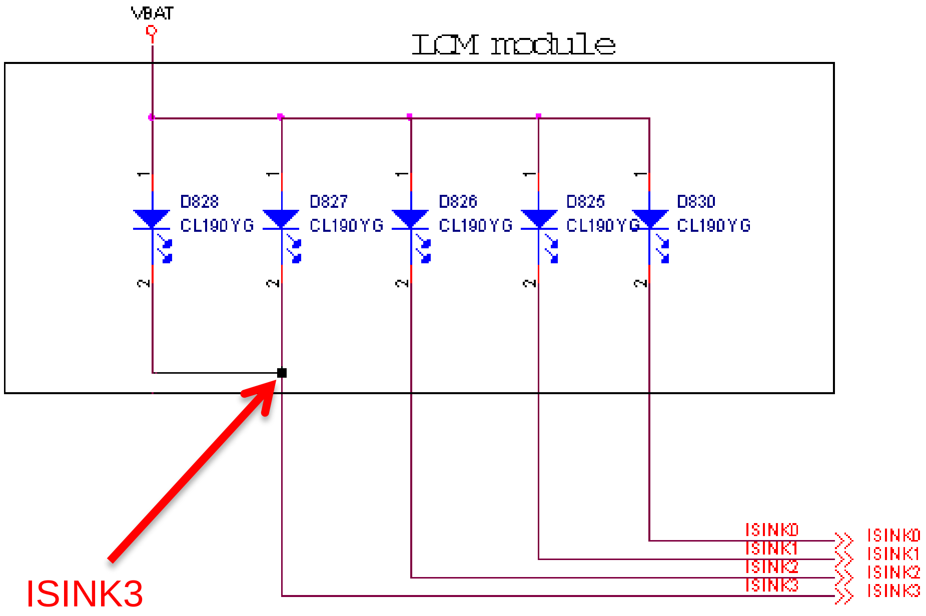

- Customer software configuration

  ISINK0~2: 24mA (4mA/step)

  ISINK3: 48mA (8mA/step)

Reference design - Schematic

6 LED for Backlight

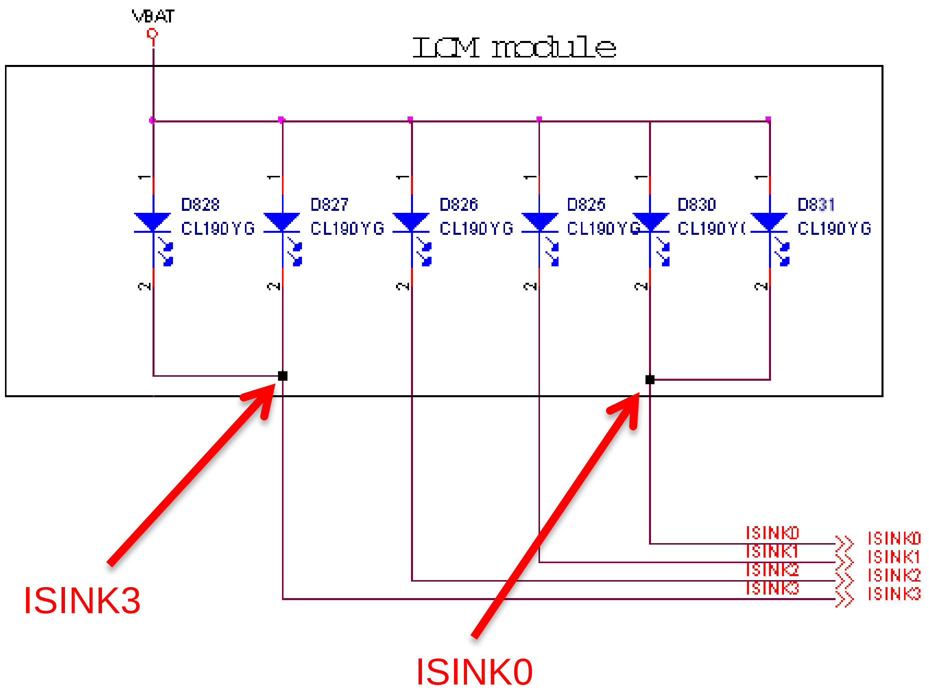

- Customer software configuration

  ISINK0/3: 48mA (8mA/step)

  ISINK1/2:24mA (4mA/step)

LED Absolute Rating

Absolute Maximum Ratings at Ta=25℃

Parameter	LTW-206DCG-E3H	Unit
Power Dissipation	120	mW
Peak Forward Current (1/10 Duty Cycle, 0.1ms Pulse Width)	100	mA
DC Forward Current	30	mA

- The DC forward current absolute maximum rating should be higher than operation current, otherwise that would have reliability concern.

Condition 1: if Forward Voltage Tolerance of all backlight LEDs ≦ +/- 0.1V
You can connect cathode of LED to ISINK directly without current matching resistors..

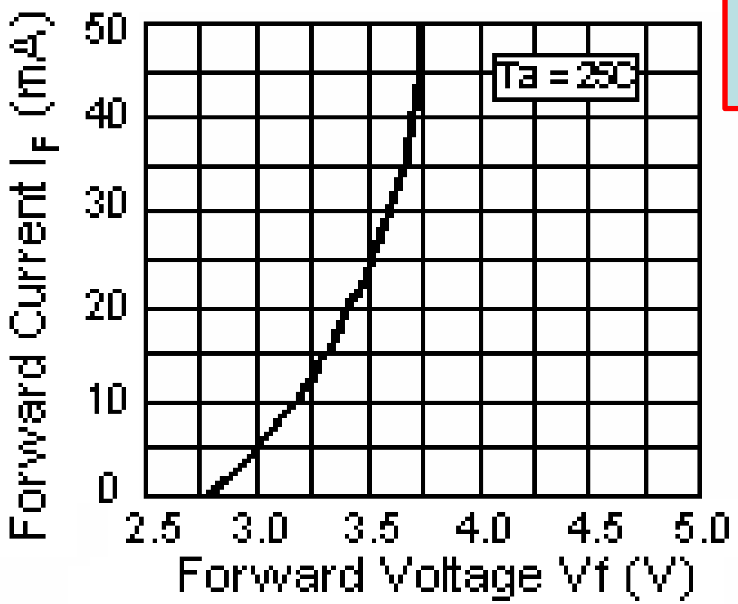

Fig.2 Forward Current vs. Forward Voltage

VF Bin ➔ VF(forward voltage) of backlight LED may has distribution and vender may classified them into some groups.

VF Spec. Table

VF Bin	Forward Voltage (V) at IF = 20mA	
	Min.	Max.
VZ	2.8	2.9
V0	2.9	3.0
V1	3.0	3.1
V2	3.1	3.2
V3	3.2	3.3
V4	3.3	3.4

If you choose a classification and the absolute difference of Min and Max is smaller or equal to 0.1V. You can connect cathode of LED to ISINK directly without matching resistors.

- Please confirm with LED backlight module vendor to make sure the LEDs' forward voltage tolerance smaller than +/- 0.1V to prevent current mismatch issue.
  - VF tolerance +/- 0.1V => Current mismatch < 5mA

Condition 2: if Forward Voltage Tolerance of all backlight LEDs > +/- 0.1V

Please reserve current resistors on dual LEDs ISINK path.

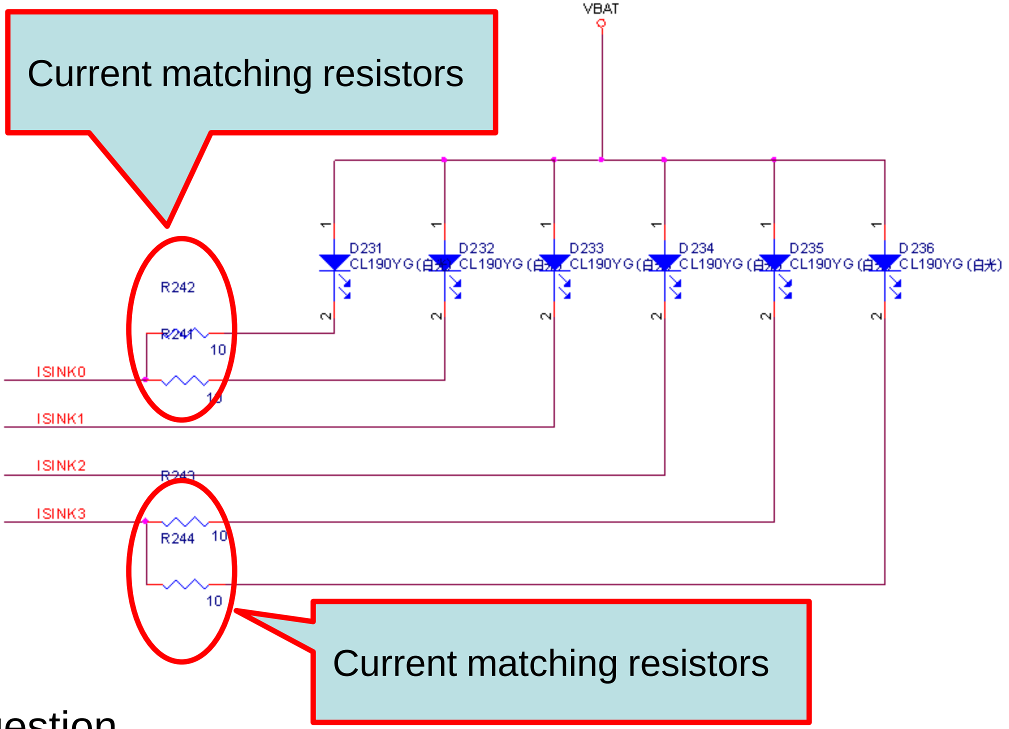

Recomend sugestion

- VF mismatch < 0.1V => 不需要補償電阻
- 0.1V< VF mismatch < 0.45V => 10ohm 補償電阻 (需要考慮 drop voltage 影響)
- 0.45V< VF mismatch => 15ohm 補償電阻 (需要考慮 drop voltage 影響)

Drivers Setting for RF De-sense

Reserve bypass Cap

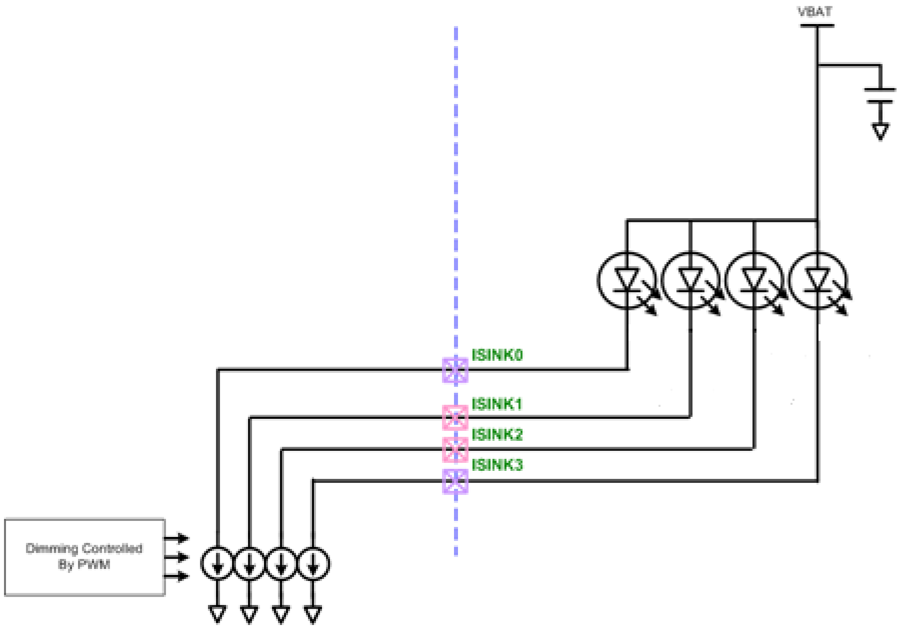

- Purpose: Reserve bypass cap to reduce RF de-sense
  - Reserve more than 1uF cap in ISINK VDD input

Driver

ISINK Driver Setting

- Setting mode by ISINKS_CHX_MODE (PWM/ Register mode/Breath mode)
- Setting current by ISINKS_CHX_STEP
  - Current from 4mA to 24mA
- Setting frequency by ISINK_DIMX_FSEL
  - Frequency from 0.1Hz to 31.25KHz

Driver

ISINK Breath mode Setting

- Setting Trising and Tfalling by ISINKS_BREATHX_TRF_SEL; from 0.123s~ 3.075s
- Setting Ton by ISINKS_BREATHX_TON_SEL; from 0.123s~ 3.075s
- Setting Toff by ISINKS_BREATHX_TOFF_SEL; from 0.246s~ 6.151s

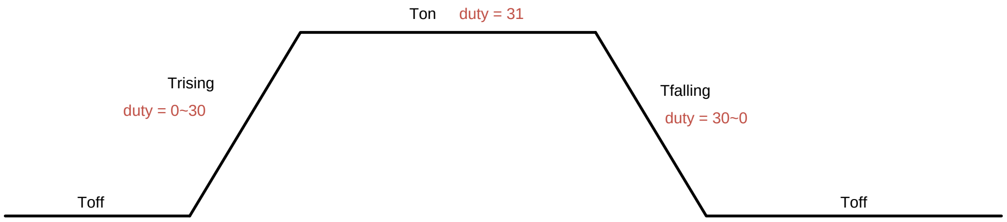

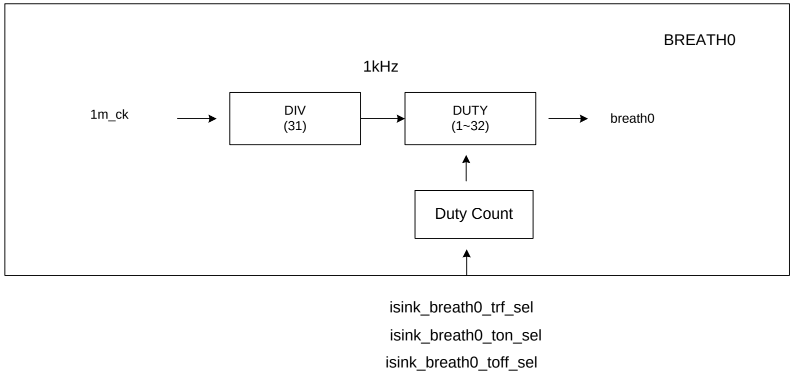

Confidential B

Pulse Charger

(Please Refer to Common Design:
Pulse Charger for Smart Phone Design Notice)

Copyright © MediaTek Inc. All rights reserved.

Pulse Charger Feature List

Feature \ Function	Pulse Charger
Charging type	Pulse Charging
Maximum charger input voltage	30V
Support battery type	Li-ion
VCHG OVP	Pre-CC : 10.5V CC : 10.5V (Maximum) ; 7V (Default)
CV	4.2V (Default)
CC Maximum Current	320mV/R_{SENSE}
Pre-charge	70mA(USB) / **300mA(*)**(AC<7V), 70mA(AC>7V)
Battery OVP	4.3V (Default)
Watchdog timer	Yes
Pre-charge safety timer	35 Minutes
Passed element	BJT+ N-MOSFET
Pre-charge/CC overlap	Yes

Note: Pre-charge current of AC charger is set to 300mA for speed up pre-charge time.

Confidential B

USB-IF BC v1.1

(Please Refer to Common Design: USB-IF BC v1.1 Design Notice)

Copyright © MediaTek Inc. All rights reserved.

Down Load without Battery

Copyright © MediaTek Inc. All rights reserved.

Force Charger Mode for USBDL

- Two method to use USB power port as source in factory D/L stage.
  - Method 1: Floating FCHR_ENB enable “Charger auto on”.
  - Method 2: DL key pressed (FCHR_ENB pull down).

    Set charger to 450mA (0.2 ohm R_sense) when detect .
- FCHR_ENB 10K pull up Vbat to disable “Charger auto on”.
- 32 seconds timeout for security concern.

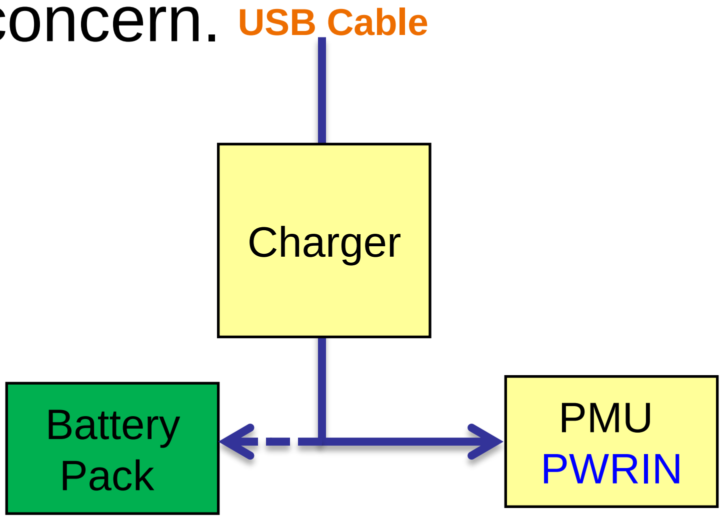

Auto Charger On Enable (Default Setting)

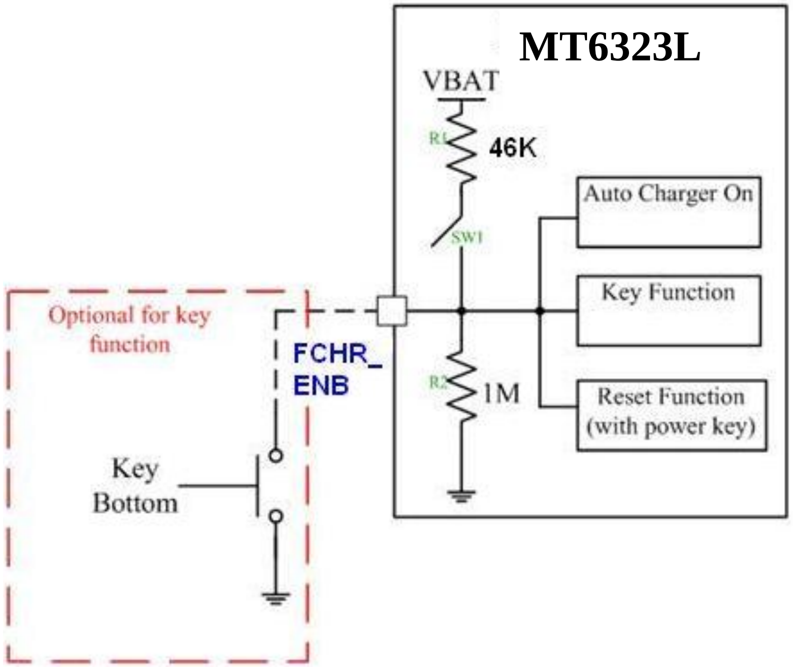

- Floating FCHR_ENB enable “Charger auto on”. R2 default weakly pull down to force charger on,.
- Use this FCHR_ENB as key function.
- BAT_ON pin must connect to Battery pack NTC (BAT_ON pin can’t tie to GND), else LCM will flicker and USB comport unceasing re-connect in charger plug-in @ without battery condition.

Auto Charger On Disable

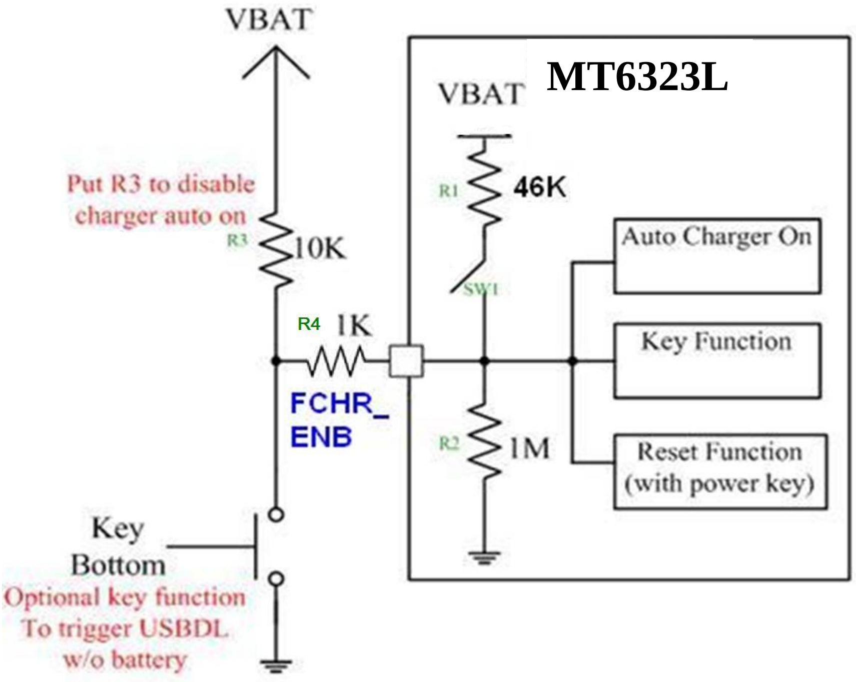

- R3 10K pull up Vbat to disable "Charger auto on".
- Use this FCHR_ENB as key function.
- BAT_ON pin must connect to Battery pack NTC (BAT_ON pin can't tie to GND), else LCM will flicker and USB comport unceasing re-connect in charger plug-in and press DL key @without battery condition

Application Scenarios

- Method 1: Floating FCHR_ENB enable “Charger auto on”.)
  - The charger will auto charge 32sec when USB(Charger) plug-in.
- Method 2: R3 10K pull up Vbat to disable “Charger auto on”.
  - FCHR_ENB as on board key switch
    - Can enter USBDL and USBDL w/o battery without test fixture on PCBA stage or assembly done.
    - User may enter this mode occasionally. (prevent by timeout setting)
  - FCHR_ENB as test point.
    - Test fixture needed.

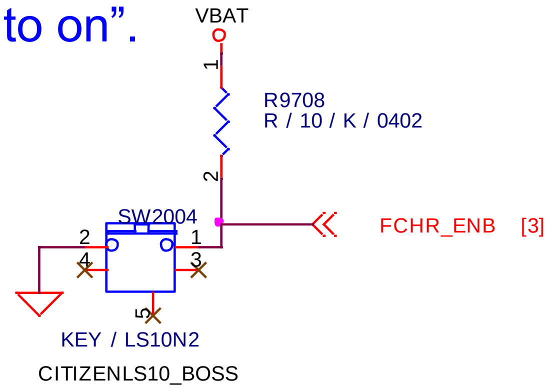

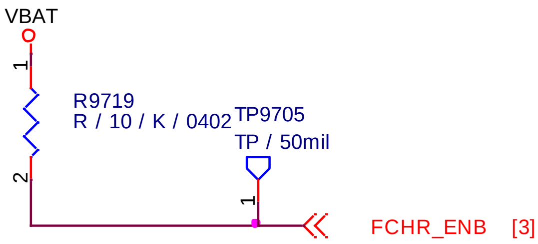

Force Charger Mode Cases

FCHR_ENB State	Charging Behavior (32sec 450mA)
Floating FCHR_ENB	Yes
R3 10K pull up Vbat	No

Press FCHR_ENB Key	Yes

Confidential B

BAT_ON Application Notice

Copyright © MediaTek Inc. All rights reserved.

Application Circuit

- Application Circuit

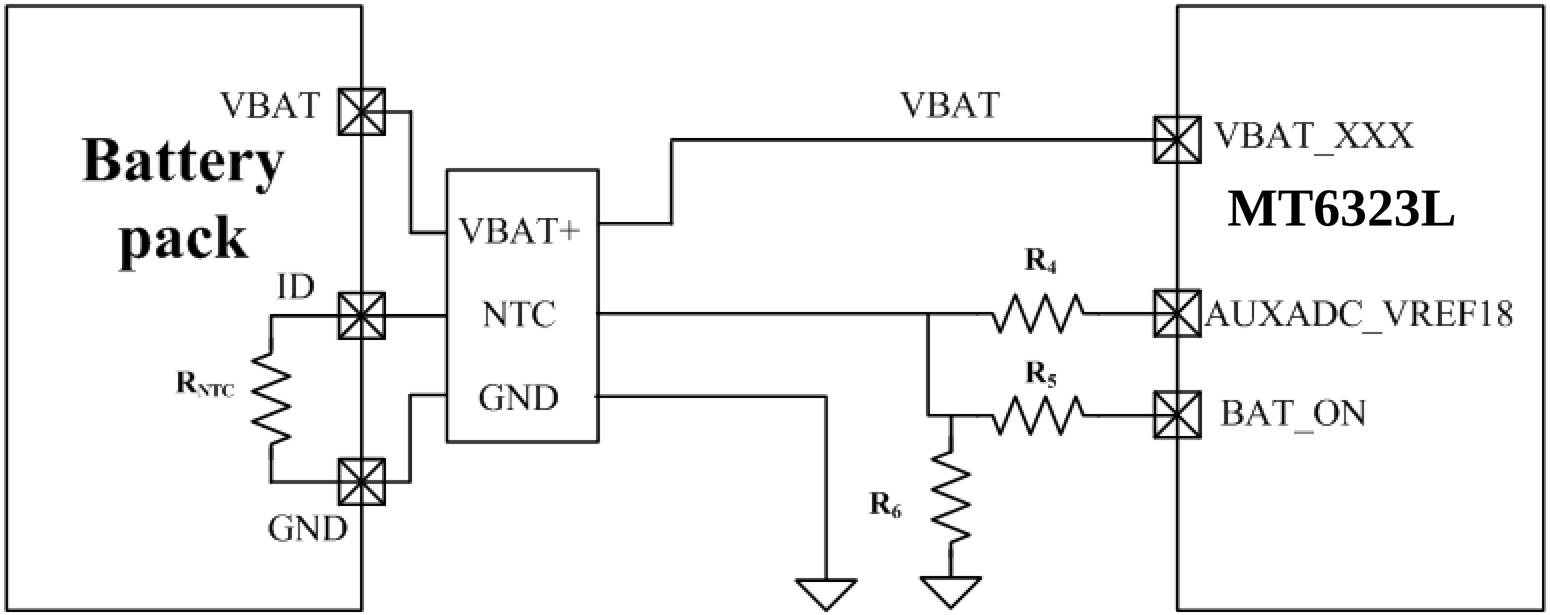

R_4: pull high resistor
R_5: Protect resistor (1K Ω)
R_{NTC}: Thermistor (IN pack side)
R_6: Bat temp compensate resistor

BAT_ON Application Layout Notice

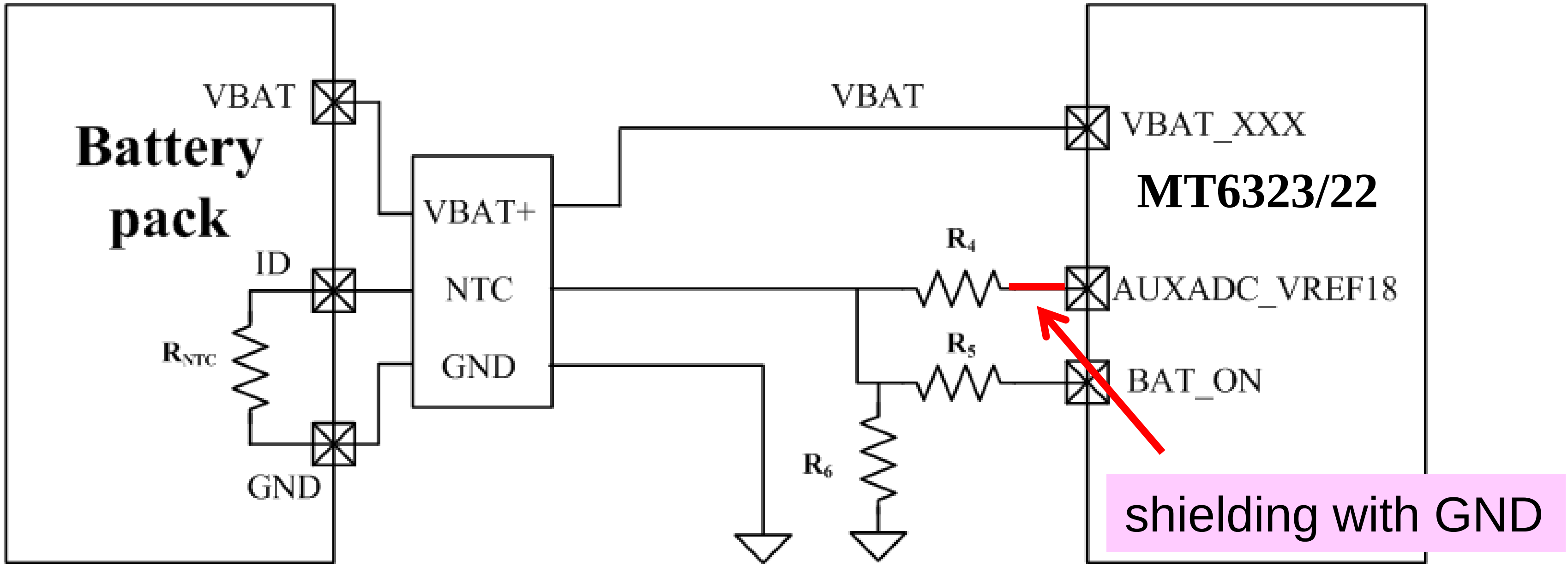

- R4 pull high resistor should be closed to MT6323L AUXADC_VREF18 PIN (C2), and the path need shielding with GND.

Copyright © MediaTek Inc. All rights reserved.

Note 1: Battery Pack NTC Selection Criteria

- Note 1: Battery pack NTC selection criteria
  - R_{NTC}: 10k**±1% at 25 ℃**, and β-constant(25 ℃-50 ℃)(K)=3380K **±3% or ±1%**
  - R_{NTC}: 47k**±1% at 25 ℃**, and β-constant(25 ℃-50 ℃)(K)=4050K **±3% or ±1%**

NTC spec example :

Part Number	Resistance (25°C)	B-Constant (25-50°C) (K)	Max. Operating Current (25°C) (mA)	Rated Electric Power (25°C) (mW)	Typical Dissipation Constant (25°C) (mW/°C)	Operating Temperature Range (°C)
NCP18XQ102□03RB	1.0k ohm	3650 ±3%	1.00	100	1	-40 to 125
NCP18XW152□03RB	1.5k ohm	3950 ±3%	0.81	100	1	-40 to 125
NCP18XW222□03RB	2.2k ohm	3950 ±3%	0.67	100	1	-40 to 125
NCP18XW332□03RB	3.3k ohm	3950 ±3%	0.55	100	1	-40 to 125
NCP18XM472□03RB	4.7k ohm	3500 ±3%	0.46	100	1	-40 to 125
NCP18XW682□03RB	6.8k ohm	3950 ±3%	0.38	100	1	-40 to 125
NCP18XH103□03RB	10k ohm	3380 ±3%	0.31	100	1	-40 to 125
NCP18XW153□03RB	15k ohm	3950 ±3%	0.25	100	1	-40 to 125
NCP18XW223□03RB	22k ohm	3950 ±3%	0.21	100	1	-40 to 125
NCP18WB333□03RB	33k ohm	4050 ±3%	0.17	100	1	-40 to 125
NCP18WB473□03RB	47k ohm	4050 ±3%	0.14	100	1	-40 to 125
NCP18WD683□03RB	68k ohm	4150 ±3%	0.12	100	1	-40 to 125
NCP18WF104□03RB	100k ohm	4250 ±3%	0.10	100	1	-40 to 125
NCP18WM154□03RB	150k ohm	4500 ±3%	0.08	100	1	-40 to 125
NCP18WM224□03RB	220k ohm	4500 ±3%	0.06	100	1	-40 to 125
NCP18WM474□03RB	470k ohm	4500 ±3%	0.04	100	1	-40 to 125

Both flow and reflow soldering methods can be employed.
A blank column is filled with resistance tolerance codes. (J: ±5%, K: ±10%)
Tolerance ±1% NCP18XH103F03RB is also availalbe for 10k ohm type.

Note 1: Battery Pack NTC Selection Criteria

Battery Temperature Measure Accuracy

- Battery temperature measure accuracy depend on NTC accuracy and β-constant (25 ℃-50 ℃)(K) accuracy selection

NTC Accuracy @ 25℃	1%	1%	5%
β-constant (25℃-50℃)(K) Accuracy	1%	3%	3%
Battery temperature measure accuracy spec	< ±4℃	< ±5℃~±6℃	< ±7℃~±8℃

Note 2: R4 Pull-high Selection & SW Setting

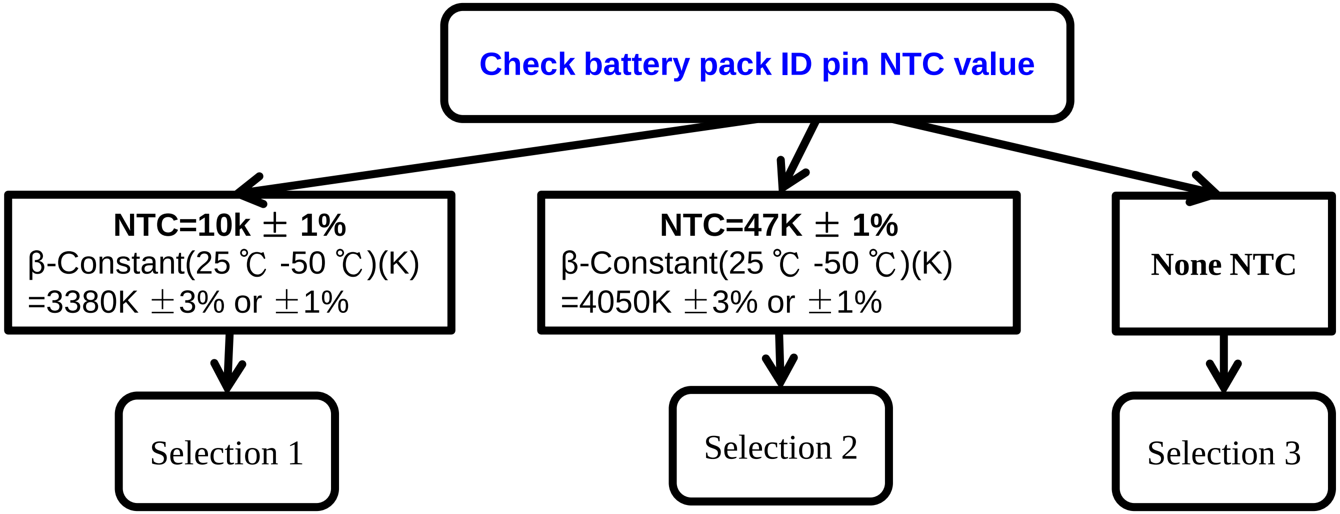

Which your selection	R4 pull high selection	SW setting
Selection 1	**Recommend R4=16.9K +/-1%** **Recommend R6=30K +/-1%**	Check SW R4 R6 value setting
Selection 2	**Recommend R4=61.9K +/-1%** **Recommend R6=107K +/-1%**	Check SW R4 R6 value setting
Selection 3	R4,R6 NC and BAT_ON pin short to GND (Without battery temperature information)	No temp. sensor and need software disable thermal protection.
Selection 4	Step1. R6/(R4+R6)*1.8 >1.104 Step2. (R6//RNTC_LT)/((R6//RNTC_LT)+R4)*1.8<1.04 Step3. (R6//RNTC_HT)/((R6//RNTC_HT)+R4)*1.8>0.22	Check SW R4 R6 NTC table value setting

Note 3: Recommended Location of NTC in Battery Pack

- **Recommended location of NTC in battery pack**
  - Move NTC thermistor away from P+ and P-
  - Mount NTC thermistor to the side of PCB toward the cell

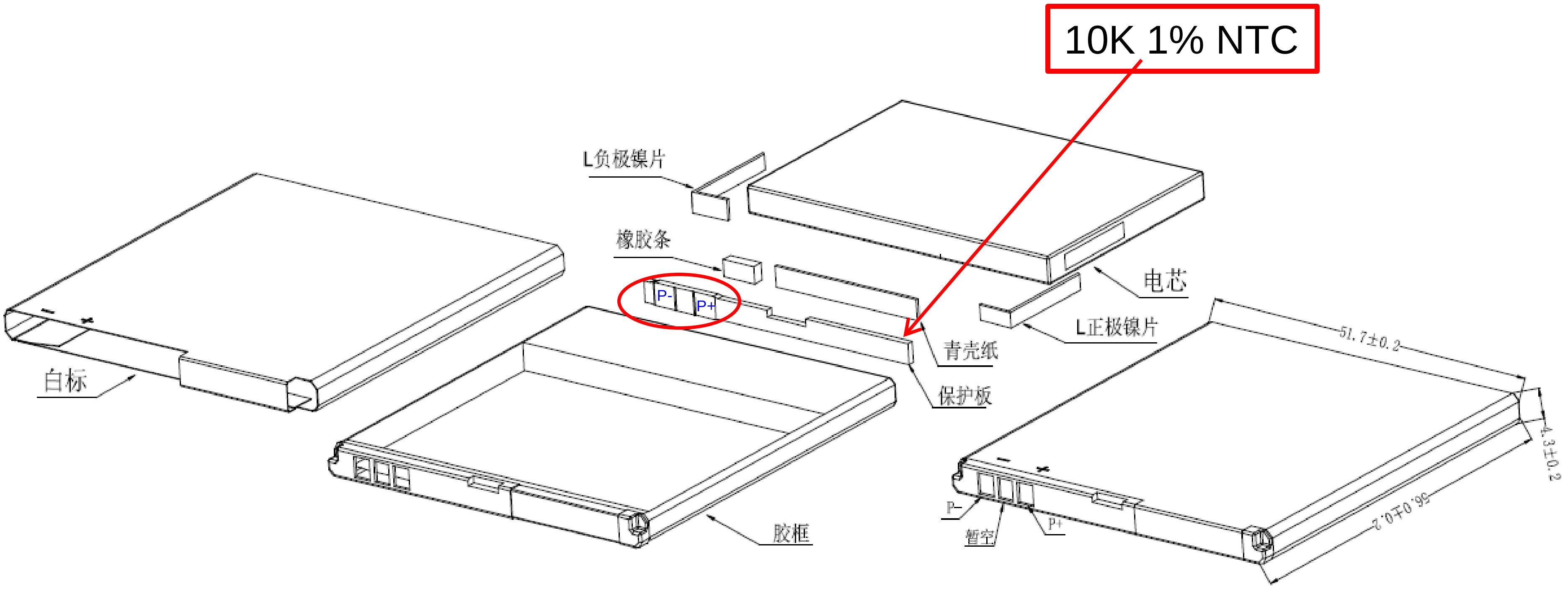

Note 4: Confirm whether to meet the above specification

- Violation of the above specifications, will result in the phone's temperature measurement error.

Battery will be under
the dangerous environment

Confidential B

MT6323L Fuel Gauge Application Notes

Copyright © MediaTek Inc. All rights reserved.

Agenda

- 選擇Default ZCV table的方式
- 選擇Measure ZCV table的方式
- Fuel Gauge Test Way Introduction

Copyright © MediaTek Inc. All rights reserved.
Together, We make the difference.

Confidential B

MEDIATEK

選擇Default ZCV table的方式

Copyright © MediaTek Inc. All rights reserved.

選擇Default ZCV table的方式

Case of Customer Support		Customers	Pros	Cons	Effort
Use MTK Fuel Gauge	**Use default ZCV Table**	1. Need precise battery percentage 2. Can not get the battery ZCV table	1. Battery percentage error rate < 20% 2. Cost is cheaper than the Fuel Gauge IC (0.6~0.9US)	Need Use default ZCV Table	NA
	MTK SA measure ZCV Table for each customer	**1.Need precise battery percentage 2. Can get the battery ZCV table**	**1. Battery percentage error rate <10% 2. Cost is cheaper than the Fuel Gauge IC (0.6~0.9US)**	**Need 3 weeks for creating the ZCV table**	**Need provide the battery packet and SPEC to MTK SA for creating the ZCV table. (same as the flow of Gas Gauge IC vender)**

Detail Fuel Gauge design note please download from DCC
Fuel Gauge Contact window : Lijian Li (李剑) #85668

Copyright © MediaTek Inc. All rights reserved.
Together, We make the difference.

Fuel Gauge 開啓的硬件條件(must)

- 必需有電池溫度檢測功能電路
  - 說明：Fuel gauge需要監測電池的 溫度，通過溫度參數做算法的補償，所以必需有電池溫度檢測功能電路。NTC電阻可以選擇10Kohm@25度 或47Kohm@25度，其它阻值NTC電阻則需要客戶自己建立NTC電阻溫度表。

Copyright © MediaTek Inc. All rights reserved.
Together, We make the difference.

客制化文件準備

- 需要进行客制化修改的 cust_battery_meter_table.h 與 cust_battery_meter.h 文件.

- 說明：我們default的電池容量是1500mAh @MT6582/92，如果你選擇的電池容量與1500mAh相差比較大，就需要對電池容量相關的參數做調整。
由於該客制化是基於我們default的ZCV table數據，所以電池電量的初始容量誤差稍微變大，但不影響Fuel gauge使用中的統計偏差。而初始容量誤差在手機完成一次充滿電或放完電之後會自動校準。

Copyright © MediaTek Inc. All rights reserved.

电池容量參數客制化

- 注意：除下面描述需要修改的地方之外，請不要對其它參數進行任意修改，否則有可能導致功能異常。

Together, We make the difference.
Copyright © MediaTek Inc. All rights reserved.

Q_MAX 替換

- 1：對於50度、25度、0度、-10度的Q_MAX的填寫。
  - 注意：下面所有數據均取整數

```
#define Q_MAX_POS_50   1510
#define Q_MAX_POS_25   1500
#define Q_MAX_POS_0    1400
#define Q_MAX_NEG_10   1334

#define Q_MAX_POS_50_H_CURRENT   1486
#define Q_MAX_POS_25_H_CURRENT   1458
#define Q_MAX_POS_0_H_CURRENT    1265
#define Q_MAX_NEG_10_H_CURRENT   687
```

- Q_MAX_POS_50：這裡修改爲：標稱容量x(1316/1307)
- Q_MAX_POS_25：這裡修改爲你項目選擇電池的標稱容量（例如：1500mAh)
- Q_MAX_POS_0：這裡修改爲：標稱容量x(1220/1307)
- Q_MAX_NEG_10：這裡修改爲：標稱容量x(1162/1307)
- Q_MAX_POS_50_H_CURRENT：這裡修改爲：標稱容量x(1295/1307)
- Q_MAX_POS_25_H_CURRENT：這裡修改爲：標稱容量x(1270/1307)
- Q_MAX_POS_0_H_CURRENT：這裡修改爲：標稱容量x(1102/1307)
- Q_MAX_NEG_10_H_CURRENT：這裡修改爲：標稱容量x(599/1307)

Copyright © MediaTek Inc. All rights reserved.

MEDIATEK

Default ZCV Database

- 2：由於使用Default ZCV Database ，所以相關Database 數組不用修改，直接使用。

Copyright © MediaTek Inc. All rights reserved.
Together, We make the difference.

Fuel gauge的測試

- 完成前面的客制化修改之後，您就可以根據自己的測試方法對電池電量計進行測試驗證了。由於沒有測試的ZCV table數據參考，電量的測試方法由客戶自行確定。
- 測試說明：
  - 1：Fuel gauge只在開機時讀取電池溫度，與電池電壓OCV （Open Circuit Voltage）然後進行查表得到電池的電量百分比。
  - 2：開機之後，Fuel gauge是使用SW Coulomb Counter 對流過電池內阻的電流進行積分，得到使用的電池電量。
  - 3：爲了用戶體驗，我們的軟件中有許多tracking 的方法，tracking的方法請參考Design Notice中Fuel gauge的描述。避免給大家測試帶來困擾。

Copyright © MediaTek Inc. All rights reserved.
Together, We make the difference

選擇Measure ZCV table的方式

Copyright © MediaTek Inc. All rights reserved.

選擇Measure ZCV table的方式

Case of Customer Support		Customers	Pros	Co	
Use MTK Fuel Gauge	Use default ZCV Table	1. Need precise battery percentage 2. Can not get the battery ZCV table	1. Battery percentage error rate < 20% 2. Cost is cheaper than the Fuel Gauge IC (0.6~0.9US)	Need Use ZCV Table	
	MTK SA measure ZCV Table for each customer	**1.Need precise battery percentage** **2. Can get the battery ZCV table**	**1. Battery percentage error rate <10%** **2. Cost is cheaper than the Fuel Gauge IC (0.6~0.9US)**	**Need 3 weeks for creating the ZCV table**	**1. Need provide the battery packet and SPEC to MTK SA for creating the ZCV table. (same as the flow of Gas Gauge IC vender)**

Fuel gauge 電池ZCV測試需求，請與我司CPM聯繫

Copyright © MediaTek Inc. All rights reserved.

MEDIATEK

Confidential B

Fuel gauge 開啓的硬件條件(must)

- 必需有電池溫度檢測功能電路
  - 說明：Fuel gauge需要監測電池的 溫度，通過溫度參數做算法的補償，所以必需有電池溫度檢測功能電路。NTC電阻可以選擇10Kohm@25度 或47Kohm@25度，其它阻值NTC電阻則需要客戶自己建立NTC電阻溫度表。

Copyright © MediaTek Inc. All rights reserved.
Together, We make the difference.

填寫材料準備

- 客戶提供給3pcs全新原裝電池和電池規格書給MTK測試，測試完成之後，由MTK提供的 ZCV table of XXXX @2012xxxx.xlsx 文件。
- 需要填入ZCV數據的cust_battery_meter_table.h 與 cust_battery_meter.h 文件.

Copyright © MediaTek Inc. All rights reserved.

ZCV Data 填寫方法

- 注意：除下面描述需要修改的地方之外，請不要對其它參數進行任意修改，否則有可能導致功能異常。

Copyright © MediaTek Inc. All rights reserved.
Together, We make the difference.

Q_MAX 替換

- 1：分别將50度、25度、0度、-10度的Cmax\Cmax_400mA替換掉原來的對應溫度的電池容量Q_MAX值。
  - 注意：_H_CURRENT 代表400mA電流下對應的電池釋放容量。

```
#define Q_MAX_POS_50   1497
#define Q_MAX_POS_25   1478
#define Q_MAX_POS_0    1458
#define Q_MAX_NEG_10   1282

#define Q_MAX_POS_50_H_CURRENT   1485
#define Q_MAX_POS_25_H_CURRENT   1466
#define Q_MAX_POS_0_H_CURRENT    1420
#define Q_MAX_NEG_10_H_CURRENT   1132

#define R_FG_VALUE          20 // mOhm, base is 20
#define CURRENT_DETECT_R_FG 100  //10mA
```

50度

Cmax		1497
Cmax_400mA		1485

25度

Cmax		1478
Cmax_400mA		1466

0度

Cmax		1458
Cmax_400mA		1420

-10度

Cmax		1282
Cmax_400mA		1132

Copyright © MediaTek Inc. All rights reserved.

OAM_D5替換

- 2: 請將cust_battery_meter.h 檔案中

  #define OAM_D5 1

  更改爲

  #define OAM_D5 0

Copyright © MediaTek Inc. All rights reserved.

ZCV Database 替換 <DOD,OCV>

- 5-1：ZCV Database 替換，用ZCV table中不同溫度，50度、25度、0度、-10度的數據替換掉原始的數據。<DOD,OCV>

```
// <DOD, Battery_Voltage> Table
// TO -10C
BATTERY_PROFILE_STRUC battery_profile_t0[] =
{
  {0  , 4174},
  {2  , 4158},
  {5  , 4112},
  {7  , 4074},
  {9  , 4053},
  {12 , 4038},
  {14 , 4023},
  {16 , 3998},
  {19 , 3958},
  {21 , 3941},
  {23 , 3933},
  {26 , 3922},
  {28 , 3910},
  {30 , 3897},
  {33 , 3881},
  {35 , 3867},
  {37 , 3854},
  {40 , 3842},
  {42 , 3833},
  {44 , 3824},
  {47 , 3818},
  {49 , 3812},
  {51 , 3806},
  {54 , 3801},
  {56 , 3798},
  {58 , 3793},
```

```
  {84 , 3728},
  {86 , 3721},
  {88 , 3714},
  {91 , 3709},
  {93 , 3700},
  {95 , 3674},
  {98 , 3600},
  {99 , 3550},
  {99 , 3522},
  {100, 3506},
  {100, 3496},
  {100, 3489},
  {100, 3485},
  {100, 3482},
  {100, 3479},
  {100, 3477},
  {100, 3476},
  {100, 3474},
  {100, 3473},
  {100, 3400},
  {100, 3400},
  {100, 3400},
  {100, 3400}
};
```

負10度	OCV	VC	mAh	R(battery)	DOD	R(x1000)
	4174		0	0.34	0	340
	4158	4022	30	0.34	2	340
	4112	3976	60	0.34	5	340
	4074	3938	90	0.34	7	340
	4053	3918	119	0.3375	9	338
	4038	3899	149	0.3475	12	348
	4023	3875	179	0.37	14	370
	3998	383			16	413
	3958	372			19	578
	3941	367			21	678
	3933	3648	298	0.7125	23	713
	3922	3634	328	0.72	26	720
	3910	3621	358	0.7225	28	723
	3897	3607	388	0.725	30	725
	3881	3596	418	0.7125	33	713
	3867	3583	448	0.71	35	710
	3854	3573	478	0.7025	37	703
	3842	3563	507	0.6975	40	698
	3833	3554	537	0.6975	42	698
	3824	3545	567	0.6975	44	698
	3818	3537	597	0.7025	47	703
	12	3530	627	0.705	49	705
	306	3523	657	0.7075	51	708
	301	3516	686	0.7125	54	713
	798	3509	716	0.7225	56	723
	3793	3502	746	0.7275	58	728
	3791	3498	776	0.7325	61	733
	3788	3496	806	0.73	63	730

OCV： Open Circuit Voltage

DOD :Depth of Discharge

注意：數組的最後一對數據之後沒有","符合，即逗號。

ZCV Database 替換 <DOD,OCV>

- 5-2：如果ZCV table的數據長度不等於軟件中數組的長度，則調整軟件中數組的長度與ZCV table的數據長度相等。例如：184-125=60-1=59 ，所以調整所有的數組長度爲59，包括{0，0}數組。

```
123    // T0 -10C
124    BATTERY_PROFILE_STRUC battery_profile_t0[] =
125    {
126        {0  , 4174},
127        {2  , 4158},
128        {5  , 4112},
129        {7  , 4074},
130        {9  , 4053},
131        {12 , 4038},
132        {14 , 4023},
133        {16 , 3998},
134        {19 , 3958},
135        {21 , 3941},

178        {100, 3476},
179        {100, 3474},
180        {100, 3473},
181        {100, 3400},
182        {100, 3400},
183        {100, 3400},
184        {100, 3400}
185    };
186
187    // T1 0C
```

1	負10度	OCV	VC	mAh	R(battery)	DOD	R(x1000)
2		4174		0	0.34	0	340
3		4158	4022	30	0.34	2	340
4		4112	3976	60	0.34	5	340
5		4074	3938	90	0.34	7	340
6		4053	3918	119	0.3375	9	338
7		4038	3899	149	0.3475	12	348
8		4023	3875	179	0.37	14	370
9		3998	3833	209	0.4125	16	413
10		3958	3727	239	0.5775	19	578
52		3479	3198	1281	0.7025	100	703
53		3477	3197	1281	0.7	100	700
54		3476	3199	1281	0.6925	100	693
55		3474	3195	1282	0.6975	100	698
56		3473	3196	1282	0.6925	100	693
57		3400	3193	1282	0.5175	100	518
58		3400	3193	1282	0.5175	100	518
59		3400	3193	1282	0.5175	100	518
60		3400	3193	1282	0.5175	100	518
61							
62							

reserved.

ZCV Database 替換 <Rbat,OCV>

- 6:ZCV Database 替換，用ZCV table中不同溫度，50度、25度、0度、-10度的數據替換掉原始的數據。<Rbat,OCV> ,數據填寫方式與<DOD,OCV>相同，需要注意數組等長。

```
//////////////////////////////////////////
// <Rbat, Battery_Voltage> Table
//////////////////////////////////////////
// TO -10C
R_PROFILE_STRUC r_profile_t0[] =
{
    {340, 4174},
    {340, 4158},
    {340, 4112},
    {340, 4074},
    {338, 4053},
    {348, 4038},
    {370, 4023},
    {413, 3998},
    {578, 3958},
    {678, 3941},
    {713, 3933},
    {720, 3922},
    {723, 3910},
    {725, 3897},
    {713, 3881},
    {710, 3867},
    {703, 3854},

    {770, 3506},
    {745, 3496},
    {728, 3489},
    {718, 3485},
    {710, 3482},
    {703, 3479},
    {700, 3477},
    {693, 3476},
    {698, 3474},
    {693, 3473},
    {518, 3400},
    {518, 3400},
    {518, 3400},
    {518, 3400}
};
```

注意：數組的最後一對數據之後沒有","符合，即逗號。

負10度	OCV	VC	mAh	R(battery)	DOD	R(x1000)
	4174		0	0.34	0	340
	4158	4022	30	0.34	2	340
	4112	3976	60	0.34	5	340
	4074	3938	90	0.34	7	340
	4053	3918	119	0.3375	9	338
	4038	3899	149	0.3475	12	348
	4023	3875	179	0.37	14	370
	3998	3833	209	0.4125	16	413
	3958	3727	239	0.5775	19	578
	3941	3670	269	0.6775	21	678
	3933	3648	298	0.7125	23	713
	3922	3634	328	0.72	26	720
	3910	3621	358	0.7225	28	723
	3897	3607	388	0.725	30	725
	3881	3596	418	0.7125	33	713
	3867	3583	448	0.71	35	710
	3854	3573	478	0.7025	37	703
	3842	3563	507	0.6975	40	698
	3833	3554	537	0.6975	42	698
	3824	3545	567	0.6975	44	698
	3818	3537	597	0.7025	47	703
	3812	3530	627	0.705	49	705

Copyright © MediaTek Inc. All rights reserved.

Fuel gauge的測試

- 完成前面的修改之後，您就可以根據Fuel Gauge Test Way Introduction測試方法對電池電量計進行測試驗證了。也可以用你們自己測試方法進行測試確認。
- 測試說明：
  - 1：Fuel gauge只在開機時讀取電池溫度，與電池電壓OCV （Open Circuit Voltage）然後進行查表得到電池的電量百分比。
  - 2：開機之後，Fuel gauge是使用SW Coulomb Counter 對流過電池內阻的電流進行積分，得到使用的電池電量。
  - 3：為了用戶體驗，我們的軟件中有許多tracking 的方法，tracking的方法請參考Design Notice中Fuel gauge的描述。避免給大家測試帶來困擾。

Copyright © MediaTek Inc. All rights reserved.

Confidential B

MEDIATEK

Fuel Gauge Test Way Introduction

Copyright © MediaTek Inc. All rights reserved.

Agenda

- 測試儀器要求
- D0 精度確認測試
- Fuel gauge充放電百分比精度確認測試

Copyright © MediaTek Inc. All rights reserved.
Together, We make the difference.

測試儀器要求

- 高精度電壓表
  - 能準確量取電池的電壓，精度要求±0.1mV以下。
  - 例如：Keithley 2700
    - 說明：電壓量測的精確度直接影響測試的準確性。

Copyright © MediaTek Inc. All rights reserved.

測試環境溫度注意在25度

D0 精度確認測試1/4

- 第一步：將電池使用手機充飽，然後取出電池。
  - 注意：電量指示100%，然後拔出電池。（請在充飽點後10分鐘內拔出電池）
    - 讀取電池電量：Settings->About phone->Status->Battery level
- 第二步：取出電池靜置30分鐘，然後量測電池的電壓，記錄該電池電壓數值$V_{Battery}$。
  - 例如：$V_{Battery}$=4.17644V

Copyright © MediaTek Inc. All rights reserved.

MEDIATEK

D0 精度確認測試2/4

測試環境溫度注意在25度

- 第三步：根據$V_{battery}$，對照ZCV曲線，查出實際百分比值D_ZCV（查表法），得到真實的電池的電量指示百分比（A%），記錄該百分比值。
  - 根據$V_{Battery}$=4.17644V，採用查表法，得到實際的電池電量百分比。
    - 4.17644V在4.188V與4.175V之間，使用我們提供ZCV的Excel表可[illegible]分爲99.10125%（A%）。注意測試爲常[illegible]CV表。

25度	OCV	VC	mAh	R(battery)	DOD
	4188		0		0
	4175	4113	20	0.155	1
	4162	4100	40	0.155	3
	4147	4086	60	0.1525	4
	4134	4074	80	0.15	5
	4122	4062	100	0.15	7
	4111	4050	120	0.1525	8
	4099	4038	140	0.1525	9

常溫驗證	x1(max)	x2(min)	y1(DOD)	y2(DOD)	y(result)
	4188	4175	0	1	0.889231
					99.11077
				指示百分	99.10125
			30分钟之	4.17644	

這就是真實電池電量百分比（A%）

請將量測到的$V_{battery}$填寫在這裡

注意：常溫下測試，查表請參考25度時量測的ZCV表

請按上面的指示查表填寫相應的數字，將自動計算出電池電量百分比（A%）的值。

Copyright © MediaTek Inc. All rights reserved.

D0 精度確認測試3/4

測試環境溫度注意在25度

- 第四步：再將電池裝到手機上並開機讀取手機顯示的百分比 （B%），記錄該百分比值。
  - 例如：這裡指示的電池電量爲100% （B%）
  - 機電池電量指示位置：Setting->Ab ery

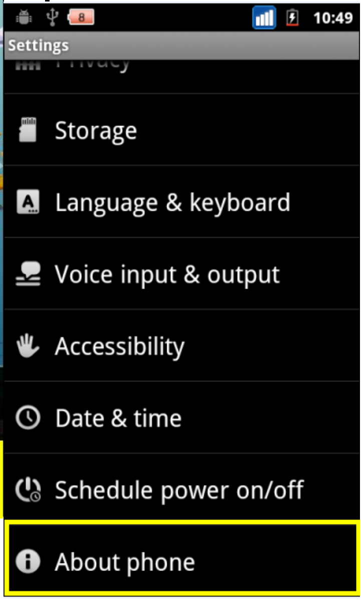

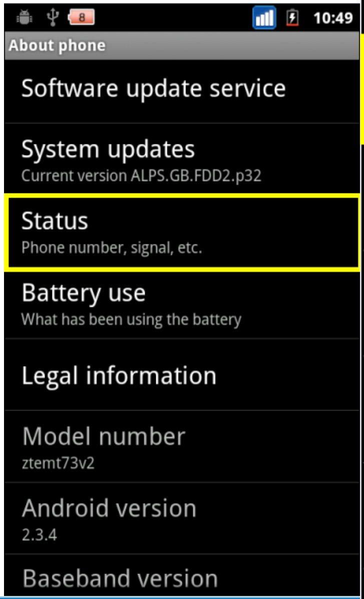

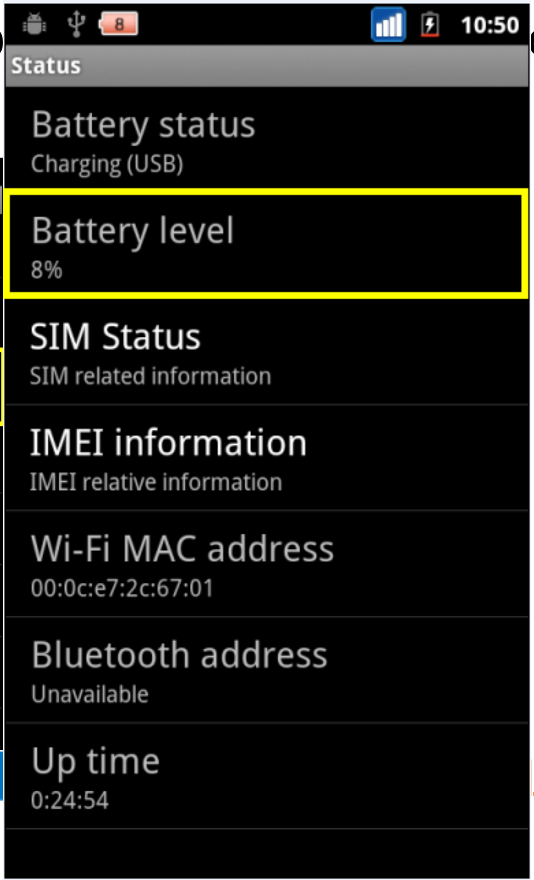

Copyright © MediaTek Inc. All rights reserved.

測試環境溫度注意在25度

D0 精度確認測試4/4

- 第五步：D0誤差=|A%-B%|<10%
  - 則D0誤差=|A%-B%|=|99.10%-100%|=**0.9%** <10%
    - 注意：這裡的誤差與電池電壓量測的準確度直接相關，所有務必確認電池電壓量測的精確度。
- 第六步：將電池放電分別創造出(95%,90%,85%,80%,75%,70%,65%,60%,25%,20%,15%, 10%)，重覆第二步到第六步的操作，直到VBAT<3.5V 停止測試。請記錄每一次的D0誤差值並確認是正常。

Copyright © MediaTek Inc. All rights reserved. / Together, We make the difference.

Fuel gauge放電百分比精度確認測試

- 第一步: 連接UART 紀錄FG Log
- 第二步: 將電池使用手機充飽
- 第三步: 執行stress load app (注意需確定螢幕不會關閉), 讓手機操動到自動關機
  - 客戶可自行改變測試條件, 但需要測試過程(100%~0%皆重載 or 皆中載 or 皆輕載) loading 條件需一致
- 第四步: 取出FG log, 將關鍵log 取出, 並整理log資訊
  - [11779.032482] (1) [47:bat_thread_kthr][Power/BatMeter] [oam_result_inf] 1, 1, 1, 1, 1, 99
  - 11779.032482 爲時間資訊, 1, 1, 1, 1, 1(72 FG原始放電百分比), 99 (72 UI SOC百分比)

Copyright © MediaTek Inc. All rights reserved.

Fuel gauge放電百分比精度確認測試

- 第四步: 將Log 資訊使用Excel 描繪出曲線
  - 標準曲線爲100%至0%之直線連線, 與直線連線的偏差即爲FG 誤差, 值需小於10%以內 (誤差超過10%, 請確認Qmax客製化參數)

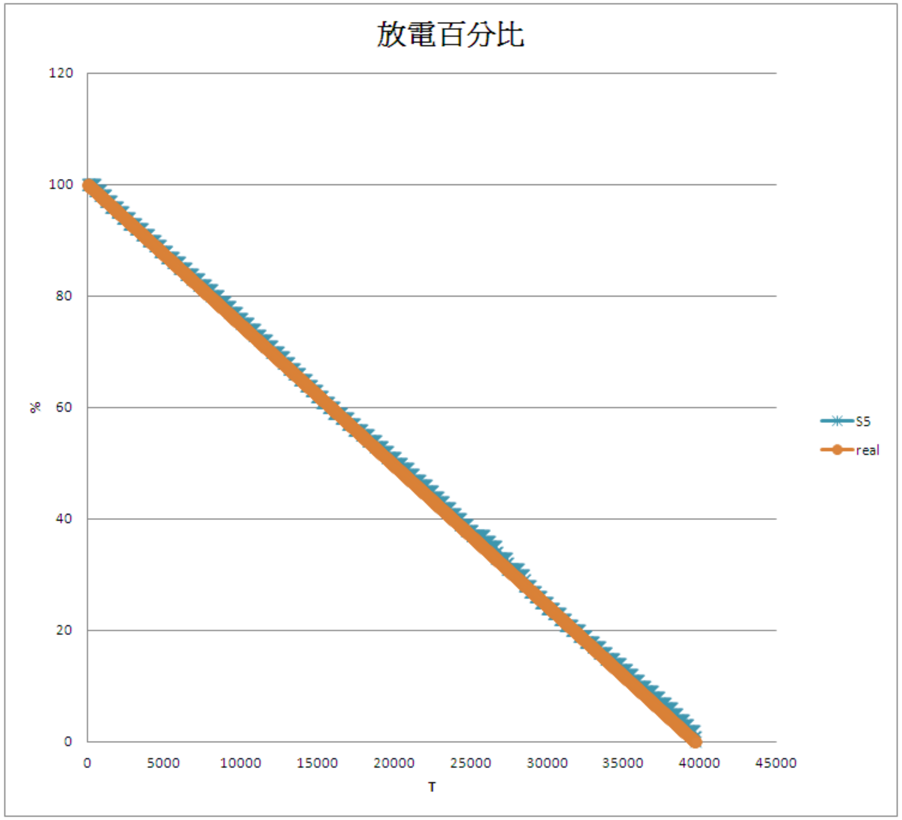

Copyright © MediaTek Inc. All rights reserved.

Fuel gauge充電百分比精度確認測試

- 第一步: 連接UART 紀錄FG Log
- 第二步: 將電池使用至沒電自動關機
- 第三步: 插入Charger (AC or USB), 至能成功開機
- 第四步: 按PWRKEY 將螢幕關閉, 並讓手機將電池充至100%
  - 測試過程(100%~0%皆AC charger or USB charger) charge current 條件需一致
- 第五步: 取出FG log, 將關鍵log 取出, 並整理log資訊
  - [11779.032482] (1) [47:bat_thread_kthr][Power/BatMeter][oam_result_inf] 1, 1, 1, 1, 1, 99
  - 11779.032482 爲時間資訊, 100, 100, 100, 100, 100(72 FG原始放電百分比), 1 (72 UI SOC百分比)

Fuel gauge充電百分比精度確認測試

- 第四步: 將Log 資訊使用Excel 描繪出曲線
  - 標準曲線爲0%至90%之直線連線, 與直線連線的偏差即爲FG 誤差, 值需小於10%以內(誤差超過10%, 請確認Qmax客製化參數)

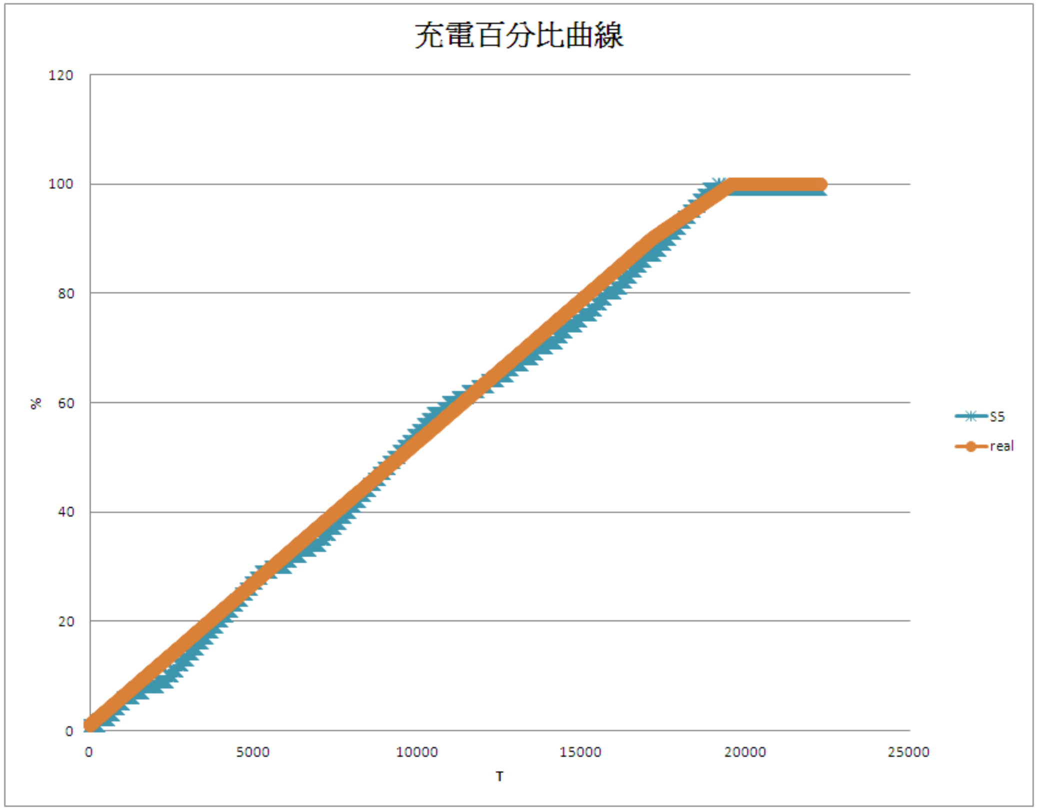

Copyright © MediaTek Inc. All rights reserved.

Confidential B

Q & A

Copyright © MediaTek Inc. All rights reserved.

Q & A

- 开机过程中,由于电流越来越大,开机过程中电流跳变很大,导致系统读到的电压偏差很大(即使通过目前77平台的算法 也无法正确补偿) ,目前发现偏差有概率超过40%的(偏低)
  - 72導入HW ZCV在PMU 尚未放開resetb時系統極輕載下量測電池電壓，取代SW 補償IR drop方式所得到之ZCV
- 开关机 或者拔插电池 再开机,电量显示百分比偏差较多,影响用户体验.
  - 72將百分比存放在RTC memory, 開機會去判斷是否爲更換電池, 若判斷不是的話會依照上次存在RTC memory 之百分比顯示, 避免重開機或同一顆電池插拔百分比不同之問題
- 77平台放电时的15%校验偏差10%以上(很固定的偏低) ,比如实际电量25%,显示也25%,但触发15%校验而导致显示由25%变为15%.
  - 72無15% 校整, 因此無此問題存在

Copyright © MediaTek Inc. All rights reserved.

Confidential B

MT6323L Sudden Power drop Auto Reboot(SPAR) Design Note

Copyright © MediaTek Inc. All rights reserved.

Sudden Power drop Auto Reboot(SPAR)

- Feature support condition
  - **VRTC output need coin cell or keep-alive capacitor**
- To enable by software
  - Three time settings can be selected
    - 50mS(default), **VRTC output need coin cell or >1uF capacitor**
    - 0.5 S , **VRTC output need coin cell or >4.7uF capacitor**
    - 1.5 S , **VRTC output need coin cell or >10uF capacitor**

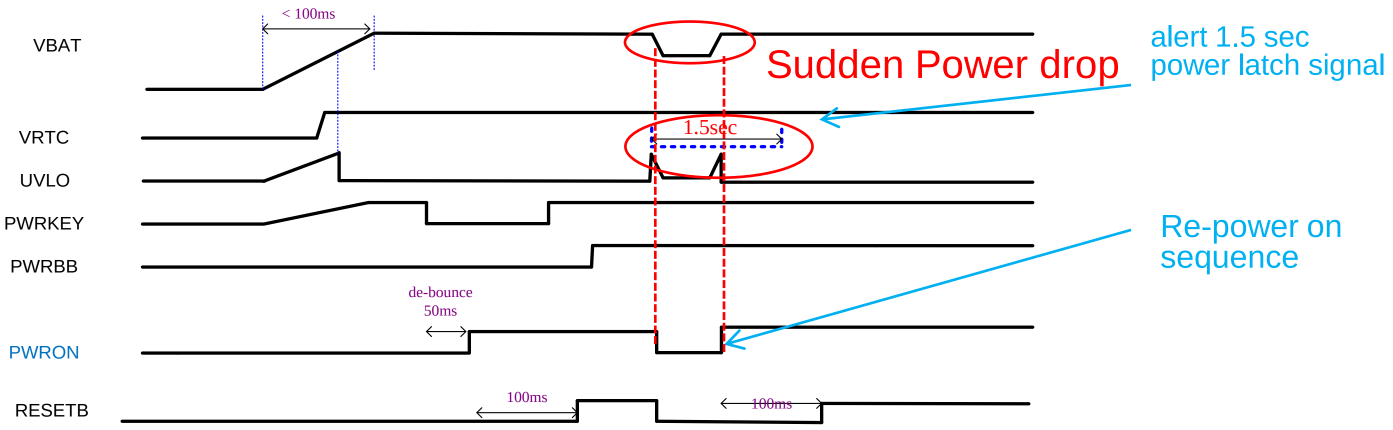

Copyright © MediaTek Inc. All rights reserved.

Confidential B

MT6323L Speech/Audio Application Note

Copyright © MediaTek Inc. All rights reserved.

Content

- Background
- MT6323L Speech related block diagram
- Comparison Table between MT6575+ MT6329 / MT6589+MT6320 / MT6582/92 + MT6323/6322 for MT6323L performance reference
- Digital gain range and setting in NVRAM
- External Amp application

Copyright © MediaTek Inc. All rights reserved.
Together, We make the difference.

Background

- Please refer to the following documents for common design note
  - Common_AFE_design note_V1o0.ppt
  - Common_ACCDET_design note_V1o0.ppt
  - Audio_AC_couple_audio_introduction.ppt

Copyright © MediaTek Inc. All rights reserved.

MT6323L Speech related block diagram

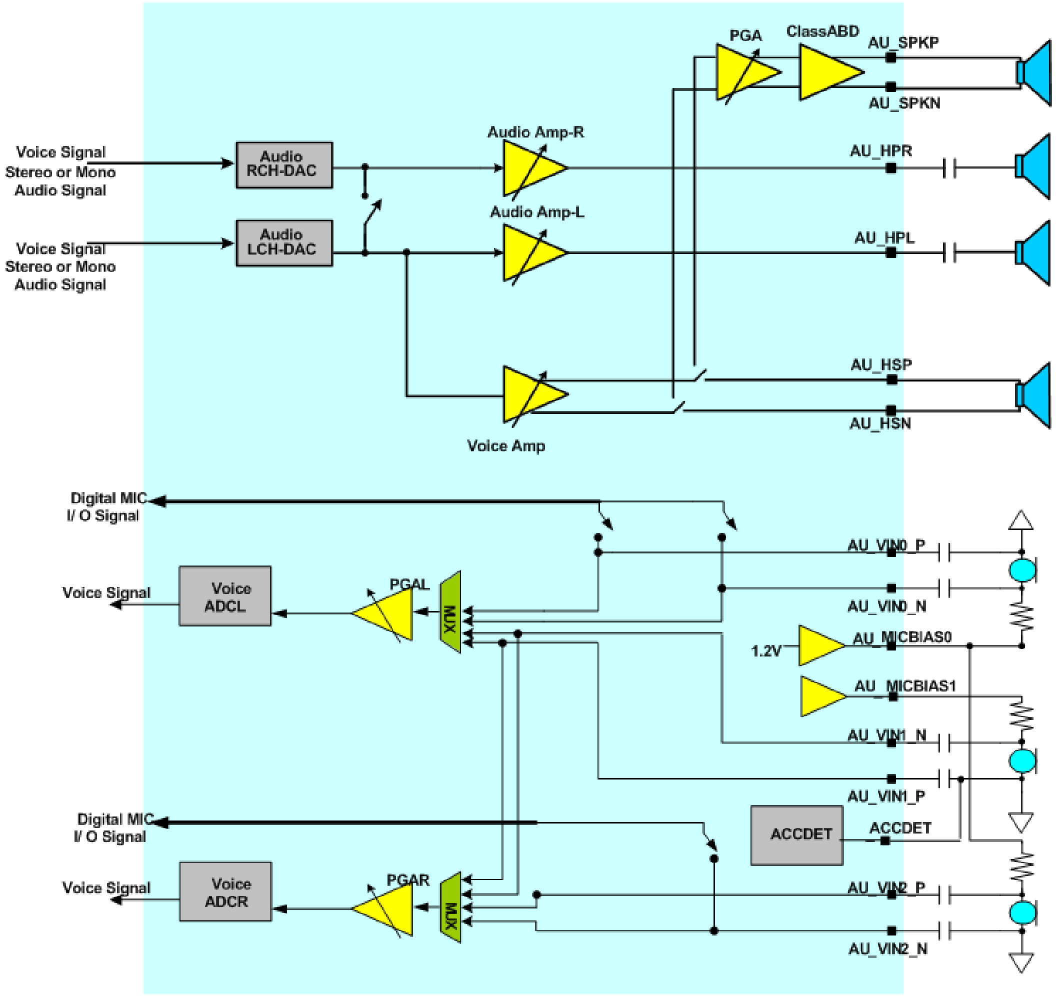

- Overview
  - **AC coupled** audio is supported
  - **2 ADCs** are supported
  - **Digital mic.** is supported
  - The **source** of the speaker amp is change from audio buffer to **voice buffer**
  - The internal speaker amp output can **directly connect** to 2/3-in-1 speaker due to the **low noise floor** of the speaker amp

Copyright © MediaTek Inc. All rights reserved.

MEDIATEK

Comparison Table

		MT6575 + MT6329	MT6589+MT6320		MT6582/92+MT6323/6322	
Uplink	gain range (dB)	-20 ~ 43	-20 ~ 43		-20 ~ 43	
	gain step size	1dB	1dB		1dB	
	Engineer mode range	0 ~ 255	0 ~ 255		0 ~ 255	
	Engineer mode step size	4	4		4	
	Max Sampling rate	48k	48k		32K	
voice	gain range (dB)	-32 ~ +8	-32 ~ +8		-31 ~ +9	
	gain step size	1dB	1dB		1dB	
	Engineer mode range	0 ~ 160	0 ~ 160		0~160	
	Engineer mode step size	4	4		4	
Audio	gain range (dB)	-32 ~ +8	Analog	Digital	Analog	Digital
			-4 ~ +8	-64 ~ 0	-4 ~ +8	-64 ~ 0
	gain step size	1dB	1dB	1dB	2dB	1dB
	Engineer mode range	0 ~ 160	112 ~ 160	0 ~ 255	112 ~ 160	0 ~ 255
	Engineer mode step size	4	4	4	8	4
DC or AC couple		DC couple	DC couple		AC couple	
Integrate	Type of SPK Amp	Class AB/D (at MT6329)	Class AB/D		Class AB/D	
	Amp gain range / step (dB)	3~21dB	6~15dB		6~20dB	
		3dB/step	1dB/step		2dB/step	
Earphone detect		ACCDET	ACCDET		ACCDET	
		EINT+ACCDET(2 ball)	EINT+ACCDET(2 ball)		EINT+ACCDET(2 ball)	
HP Multi-key detection support		o	o		o	
Dual Mic		o	o		o	
Digital MIC		o	o		o	
I2S2	Master input	x	o		o	
	Master output	x	o		o	
	Slave input	x	o		o	
	Slave output	x	x		x	

Copyright © MediaTek Inc. All rights reserved.

Digital gain range and setting in NVRAM

- Gain range is **0dB~-63dB**
- Engineer mode setting **0~255, 1dB/4** ; 0 is mute
- **Default MMI** Volume step **change to 0~16 level**

EM setting	Gain
255	0
252	-1
248	-2
244	-3
240	-4
236	-5
232	-6
228	-7
224	-8
220	-9
216	-10
212	-11
208	-12
204	-13
200	-14
196	-15
192	-16
188	-17
184	-18
180	-19
176	-20
172	-21
168	-22
164	-23
160	-24
156	-25
152	-26
148	-27
144	-28
140	-29
136	-30
132	-31
128	-32
124	-33
120	-34
116	-35
112	-36
108	-37
104	-38
100	-39
96	-40
92	-41
88	-42
84	-43
80	-44
76	-45
72	-46
68	-47
64	-48
60	-49
56	-50
52	-51
48	-52
44	-53
40	-54
36	-55
32	-56
28	-57
24	-58
20	-59
16	-60
12	-61
8	-62
4	-63
0	mute

Copyright © MediaTek Inc. All rights reserved.

External Amp application

Stereo application 1

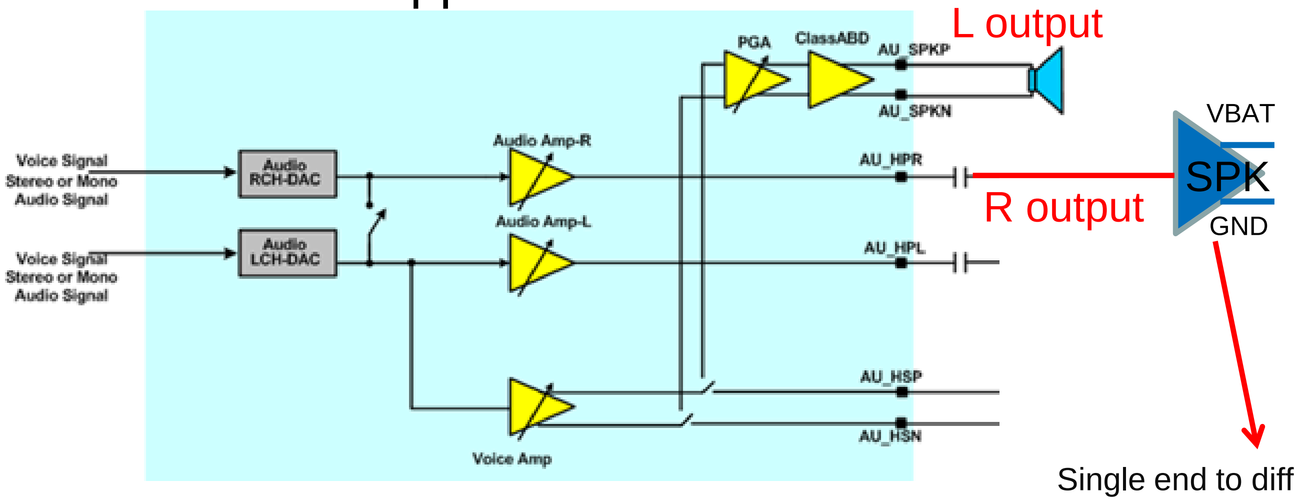

Single end to diff → Output swing 6dB reduce
→ Actually external 18dB SPK amp gain = 12dB

Stereo application 2

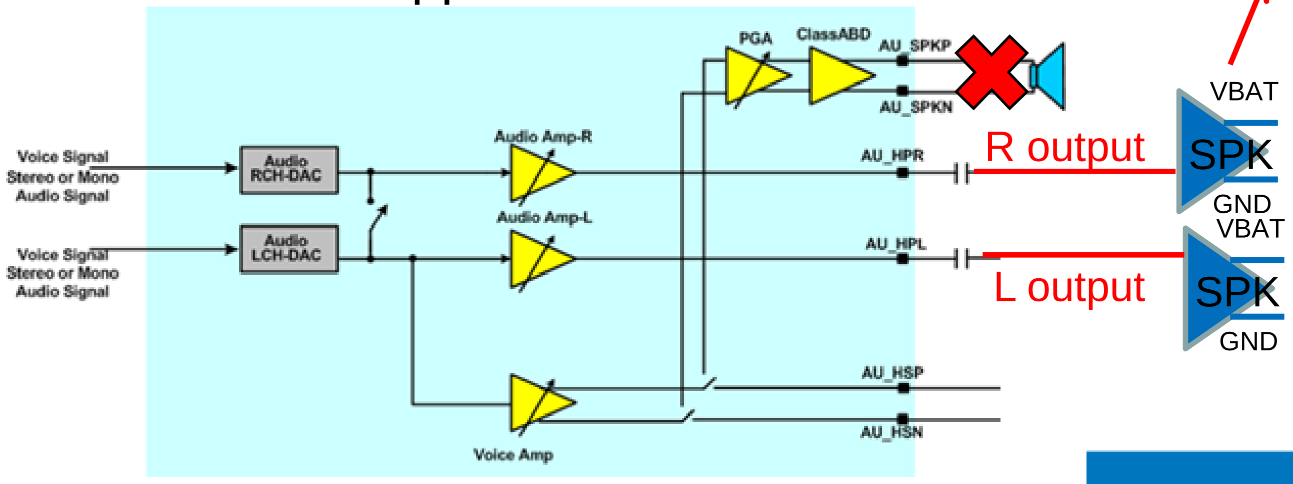

Audio Reminding notes

- MT6323L CLK input pad is DC couple design
- Don't place any capacitor on 26MHz clock between Clock source and MT6323L.

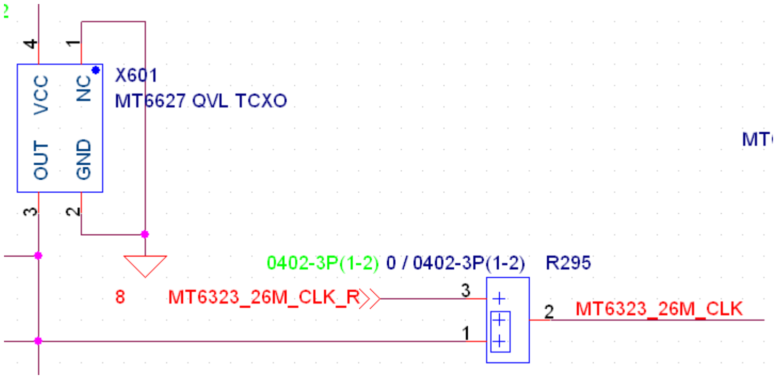

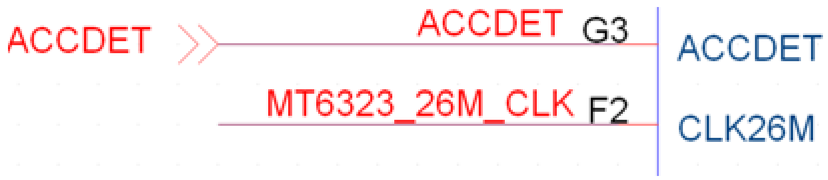

Copyright © MediaTek Inc. All rights reserved.

AC Couple Audio Design note – Component select

- Serial component in Audio buffer output
  - Serial Attenuation Resistor :
    - According to the -3dB cut off frequency generated by DC block capacitor
      A Serial Resistor can Rich the low band energy with smaller DC block capacitor.
    - The Serial Resistor also attenuate the output swing by voltage divide.

$$f_c = \frac{1}{2\pi (R_S \uparrow + R_{HP}) C \downarrow}$$

$$V_{HP} = \frac{R_{HP}}{R_S + R_{HP}} \times V_{out}$$

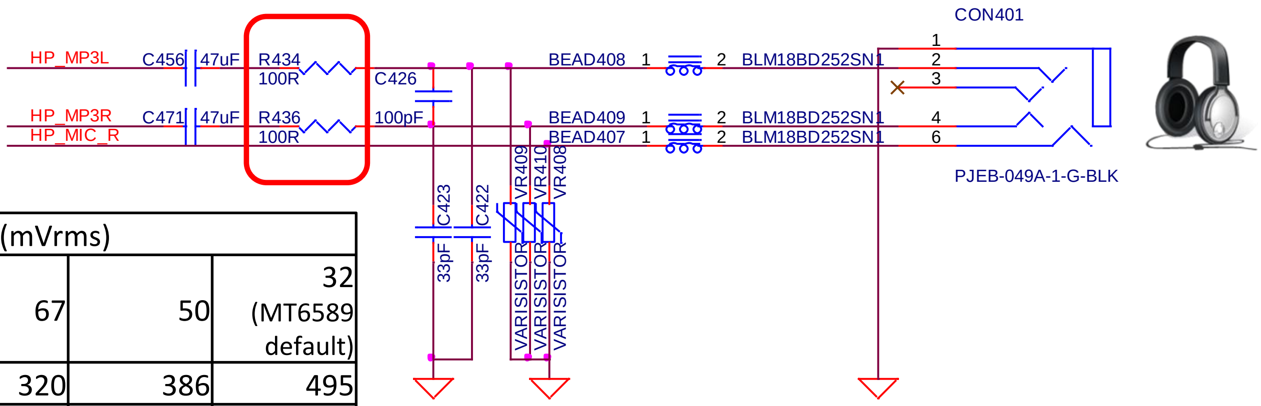

Maximum swing table (mVrms)				
Serial resistor / HP imp.	100	67	50	32 (MT6589 default)
32ohm	240	320	386	495
16ohm	137	191	240	330

AC Couple Audio Design note – Component select

- Serial component in Audio buffer output
  - DC block capacitor :
    - A Serial capacitor to block the DC term from Audio buffer is must
    - Serial Capacitor will generated a high pass filter, And get -3dB cut off frequency f_C
    - The Capacitance also result the different THD

$$f_c = \frac{1}{2\pi(R_S + R_{HP})C}$$

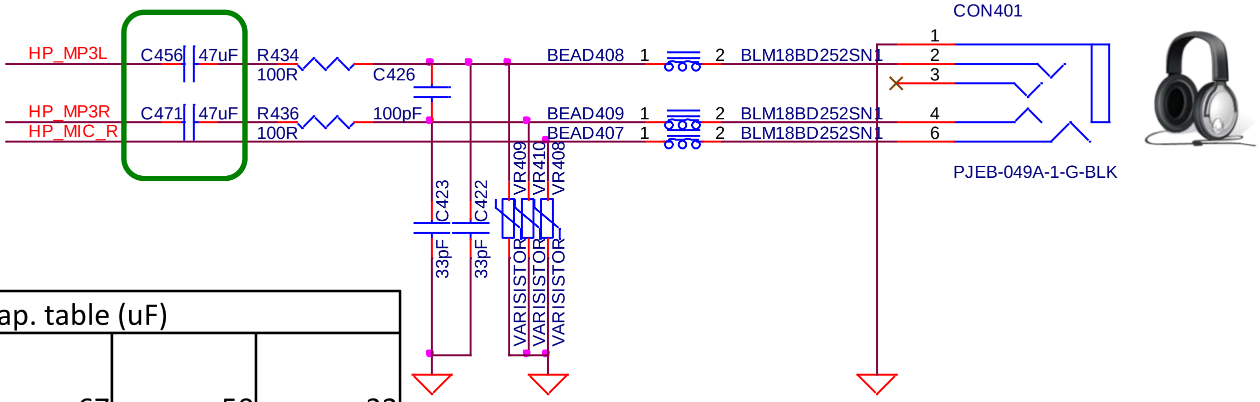

Recommend serial cap. table (uF)				
Serial resistor / HP imp.	100	67	50	32
32ohm	22uF	33uF	47uF	47uF
16ohm	10uF	22uF	33uF	33uF

Earphone Microphone bias 2.8V application

- For the Microphone bias **2.8V mode of MT6323L** is **internal test mode** , there may have some noise if VA28 is influenced
- The Microphone bias 2.8V mode is provided directly by VA28 without any filter function
- For 2.8V earphone Microphone bias requirement , please use external 2.8V LDO to provide power to Microphone instead of using Micbias of MT6323L.
- The SW compiler option at accdet_custom.h ,need to select 2.8V mode to keep the earphone key detection function , please refer “Common_ACCDET_design note” for detail

Micbias Block Diagram ➔ SW1 ON (SW2 OFF) : 2.8V mode

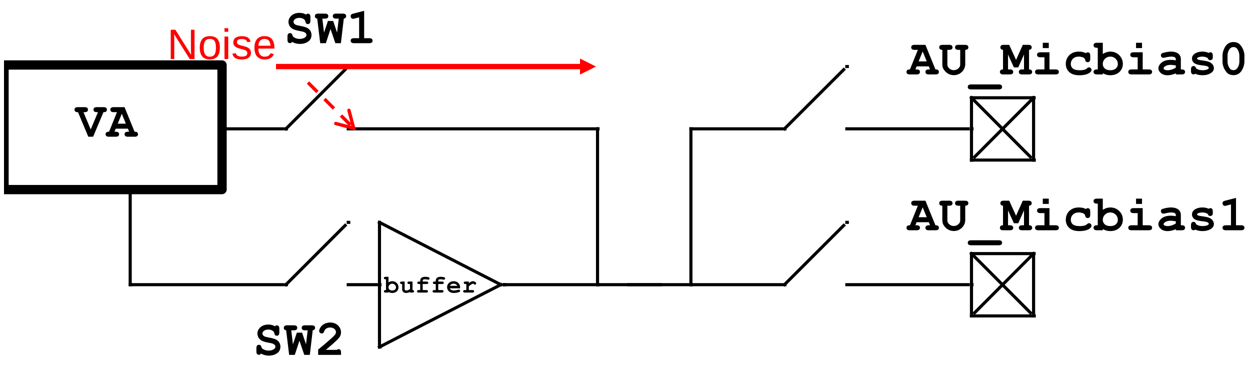

Copyright © MediaTek Inc. All rights reserved.

Confidential B

Earphone Microphone bias 2.8V application - reference schematic

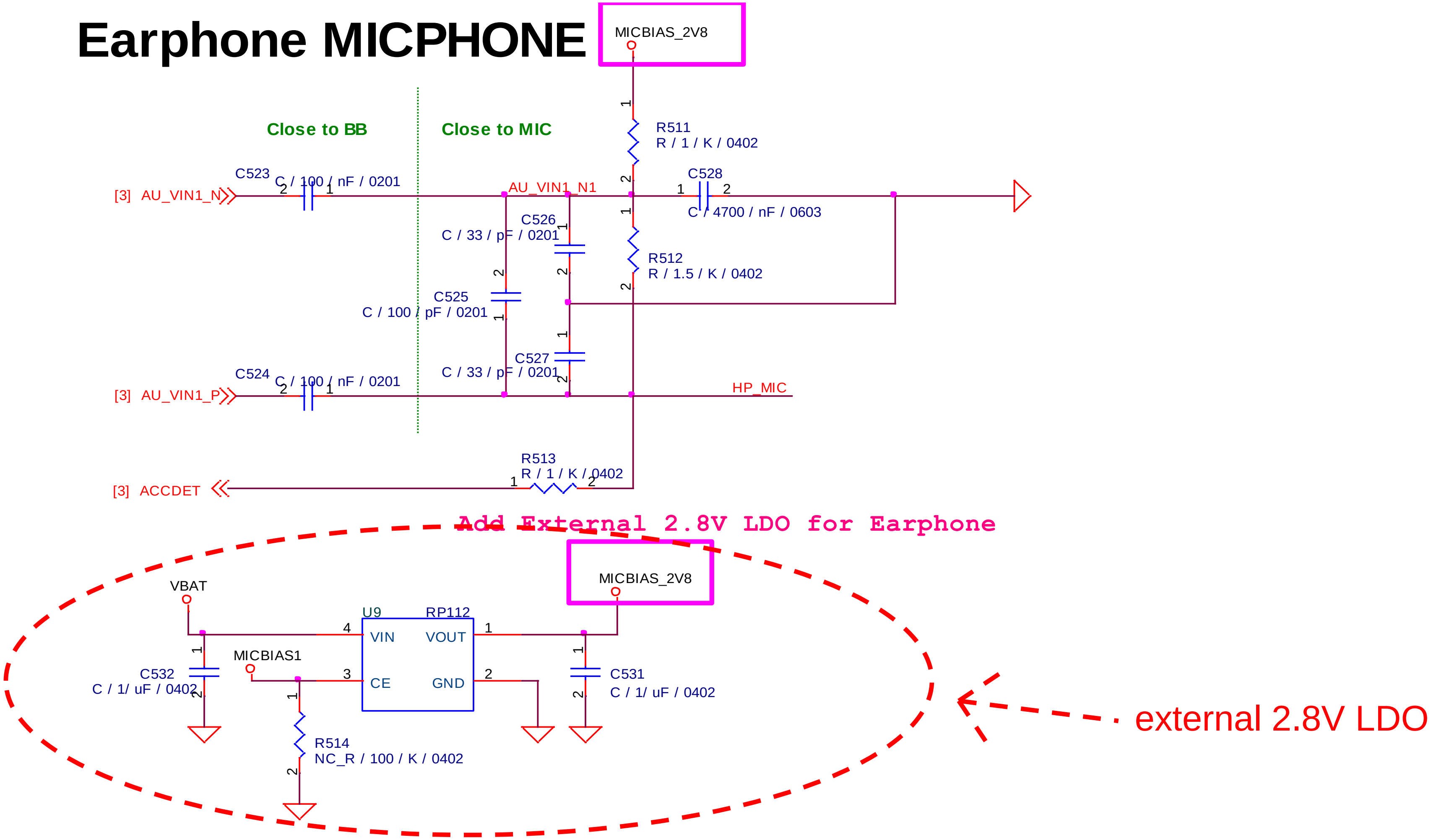

Confidential B

MT6323L RTC

Copyright © MediaTek Inc. All rights reserved.

Outline

- Schematics Design Notice
- Layout Design Notice

Schematics Design Notice

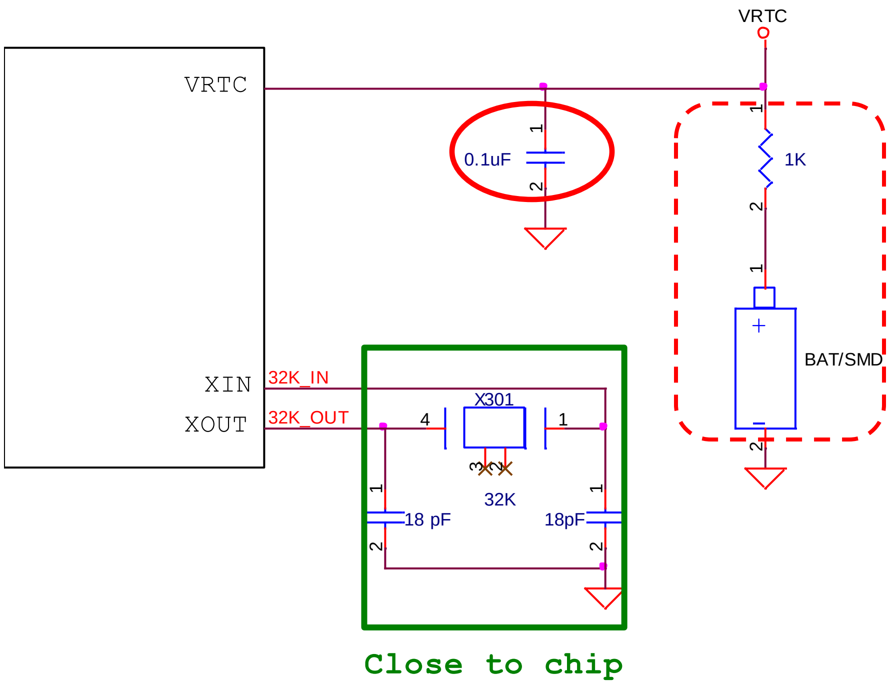

★The 0.1uF for VRTC is a must.

★Recommend implementing 0~100uF or back up battery for VRTC.

Layout Design Notice

1. 32K Crystal must be close to BB

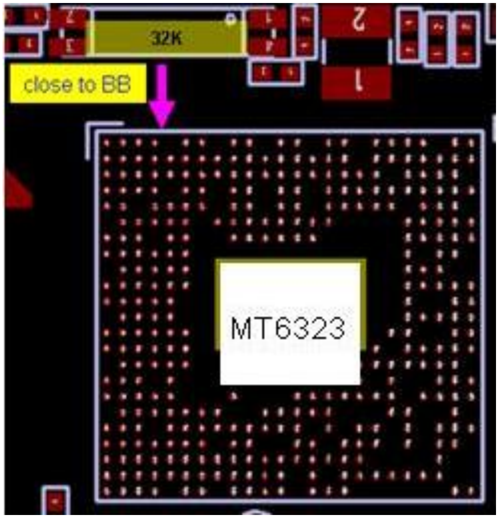

2. Keep GND plane under crystal and Xin/Xout signal need to be guarded by GND

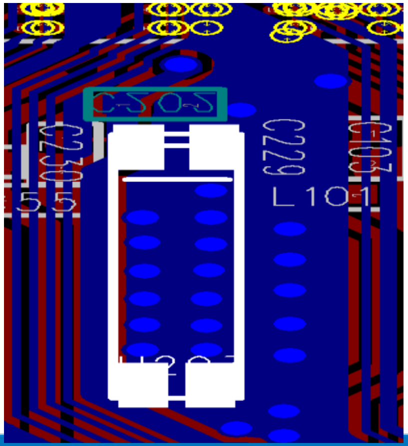

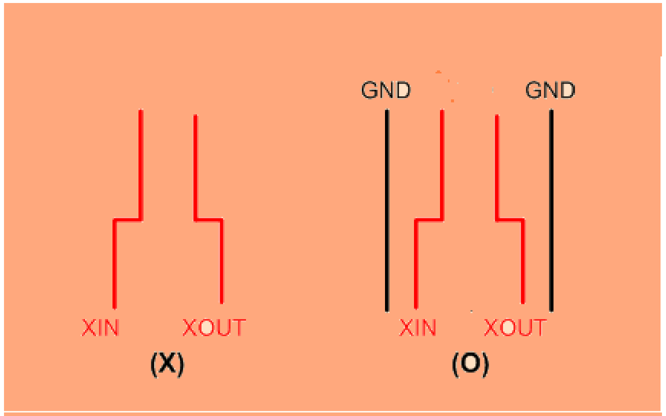

Confidential B

External Buck For MT8117/MT8127 Solution

Copyright © MediaTek Inc. All rights reserved.

External Buck For MT8117/8127 Solution

Application introduction

- Add one 1A buck (SY8088AAC) for DRAM power backup, if customer concern about power consumption.

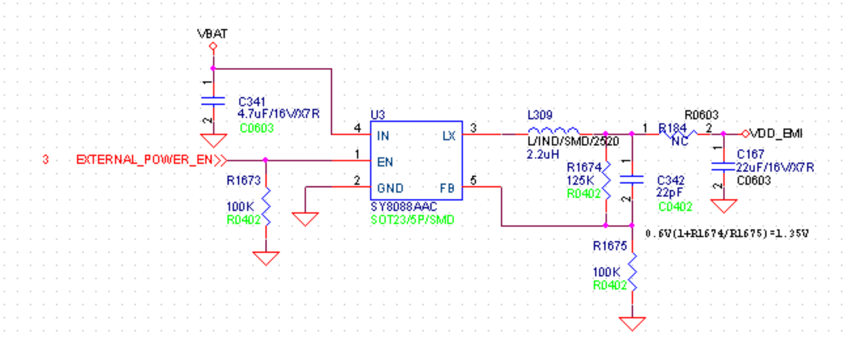

- Add one 2A buck (SY8089AAC) for MT8127 Core power backup. (under validation to check if requirement)

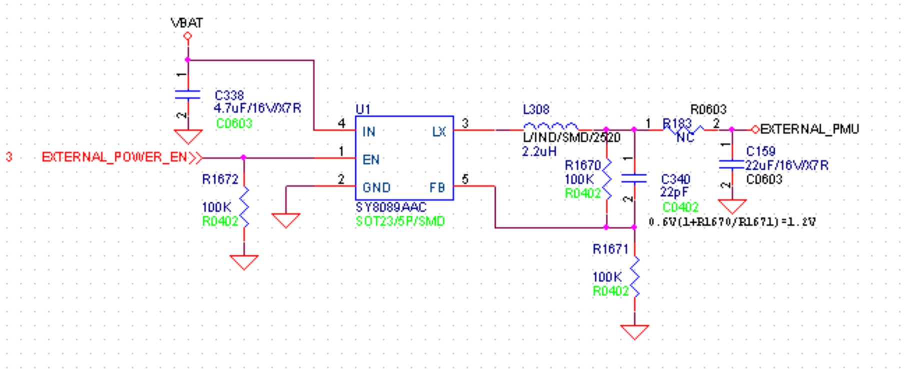

www.mediatek.com

Copyright © MediaTek Inc. All rights reserved.